MODEL

FT4X

Fox Thermal Gas Mass Flow Meter

Instruction Manual

Document #106796

Rev J

831.384.4300 | 399 Reservation Rd, Marina, CA 93933 | foxthermal.com

This publication must be read in its entirety before performing any operation. Failure to understand and follow these instructions could result in serious personal injury and/or damage to the equipment. Should this equipment require repair or adjustment beyond the procedures given herein, contact the factory at:

FOX THERMAL INSTRUMENTS, INC.
399 RESERVATION ROAD
MARINA, CA 93933
TELEPHONE: 831-384-4300
EMAIL: SERVICE@FOXTHERMAL.COM

Download Technical Data Sheets from our website:
www.foxthermal.com

Fox Thermal Instruments, Inc. (Fox Thermal) believes that the information provided herein is accurate; however, be advised that the information contained herein is NOT a guarantee for satisfactory results. Specifically, this information is neither a warranty nor guarantee, expressed or implied, regarding performance, merchantability, fitness, or any other matter with respect to the products; nor recommendation for the use of the product/process information in conflict with any patent. Please note that Fox Thermal reserves the right to change and/or improve the product design and specification without notice.

Fox Thermal FT4X Manuals:
- **Fox Thermal FT4X View™ Manual**
- **ModbusView™ Software Manual**

All Fox Thermal Manuals and software available in English.
Translations of manuals are available upon request to service@foxthermal.com.

Table of Contents

1. Introduction

a. Quick Start Guide . . . . . p. 6

b. Menu Trees . . . . . p. 8

c. General . . . . . p. 17

2. Installation (Mechanical)

a. Lateral Placement . . . . . p. 21

b. Welding Branch Outlet . . . . . p. 23

c. Installation Depth . . . . . p. 24

d. Mounting Instructions . . . . . p. 25

e. Orientation . . . . . p. 27

f. Retractor Installation . . . . . p. 29

3. Wiring (Electrical)

a. Wiring Access . . . . . p. 33

b. Input Power . . . . . p. 36

c. Signal Wiring and HART Communication Option . . . . . p. 38

d. Pulse/Alarm Wiring (optional feature) . . . . . p. 40

e. RS485 Wiring . . . . . p. 43

f. HART Handheld Wiring . . . . . p. 44

g. Remote Wiring . . . . . p. 45

4. Operation (Standard Operation)

a. Start Up . . . . . p. 48

b. Programming . . . . . p. 50

c. CAL-V™ . . . . . p. 70

d. Gas-SelectX® . . . . . p. 73

e. Data Logger . . . . . p. 77

5. Communication Protocols

a. Modbus RTU (RS485) . . . . . p. 82

b. HART Communication . . . . . p. 98

6. Maintenance

a. Safe Removal of Meter from Retractor . . . . . p. 105

b. Troubleshooting . . . . . p. 110

7. Appendices

a. Specifications . . . . . p. 114

b. Agency Approvals . . . . . p. 117

c. Dimensions . . . . . p. 118

d. Terms and Conditions of Sale . . . . . p. 129

e. Returning your meter . . . . . p. 129

8. Definitions Page 130

9. Index Page 131

Get Started

Use the table below as a guide while using the worksheet on the next page to record your notes.

NOTE! Please read the entire quick-start procedure before beginning installation.

1.	Record inside diameter (ID). Ensure the actual pipe ID matches the pipe ID shown on the factory calibration certificate. If IDs do not match, refer to "Pipe Diameter" on page 64.	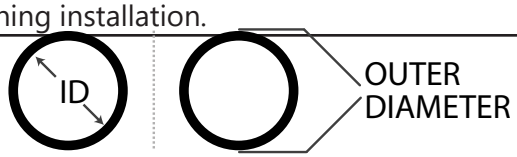
2.	Record up/downstream straight-pipe requirements based on Pipe ID and meter style (insertion or inline). [refer to p. 21]	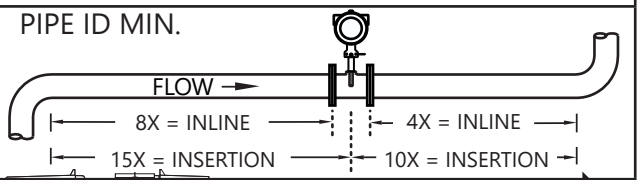
3.	The Flow Direction Indicator must point in the direction of flow. The housing can be rotated for a better view of the meter's display. Note that the 2 set screws must be loosened before the housing will turn. [refer to p. 27]	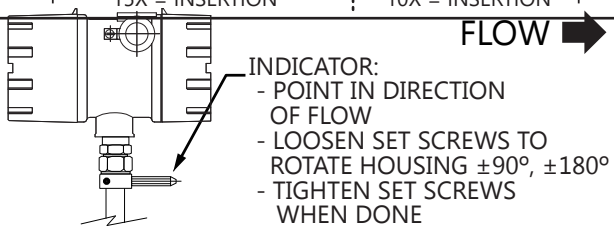
4.	Ensure correct probe depth setting. If using 1 ½" size pipe, please see note on p. 24.	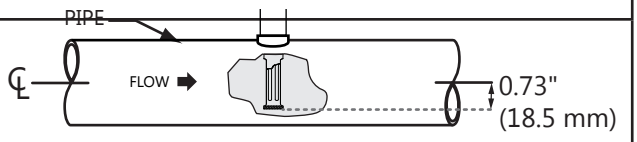
5.	Open the housing. If needed, the orientation of display can be rotated in 90° increments for a better view. [refer to p. 28 for more information]	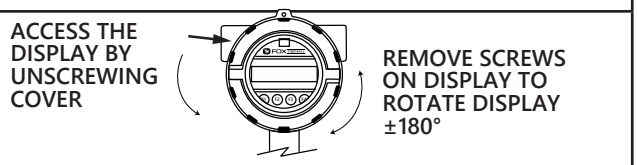
6.	Ensure power wiring [p. 36] is properly connected. [refer to Wiring section p. 33 for more information]	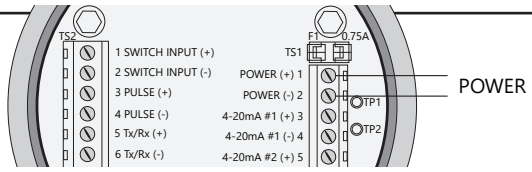
7.	Verify you have the proper signal wiring and serial communication wiring (if that option is ordered) [refer to p. 38 - p. 44 for more information]	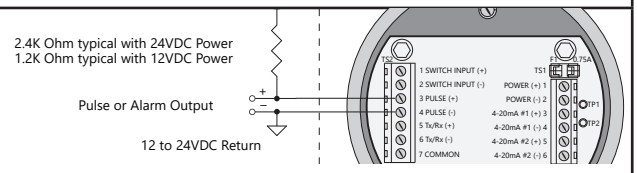
8.	Ensure remote wiring is correct if remote option ordered. [refer to p. 45 - p. 47 for more information]	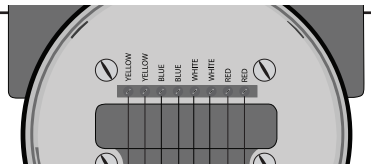
9.	Apply power to the flow meter.	
10.	Check the remaining flow meter settings by accessing the meter settings either through the front panel of the display or by using the ModbusView or FT4X View™ software. Record the settings in the spaces given for items A - F on the following page.	

Before applying power to your meter, use this worksheet to record your notes.

	Item to verify	*Serial Number:*	*Serial Number:*	*Serial Number:*	*Serial Number:*
1.	What is the Pipe ID?	ID =	ID =	ID =	ID =
2.	Calculate the Upstream/ Downstream straight-pipe requirements	UP = DN =	UP = DN =	UP = DN =	UP = DN =
3.	Is the flow indicator pointed in direction of flow? Must the housing be rotated for easy viewing?	Y / N Y / N	Y / N Y / N	Y / N Y / N	Y / N Y / N
4.	Is the probe depth setting correct?	Y / N	Y / N	Y / N	Y / N
5.	Have you rotated the display for easier viewing?	Y / N	Y / N	Y / N	Y / N
6.	Verify proper power wiring				
7.	Verify proper remote wiring (if ordered)				
8.	Verify proper input/output wiring				

After applying power to your meter, check items A - F below by accessing the meter settings either through the front panel of the meter's display or by using the ModbusView or FT4X View™ software.

A.	Which flow units have been set in meter? (SCFM, KG/H, etc..)				
B.	Correct values for reference temperature and pressure?	Y / N	Y / N	Y / N	Y / N
C.	Confirm the pipe ID listed above same as "Pipe_id="				
D.	Verify the 1st 4mA and 20mA meter settings	4mA = 20mA =	4mA = 20mA =	4mA = 20mA =	4mA = 20mA =
E.	Verify the 2nd 4mA and 20mA meter settings	4mA = 20mA =	4mA = 20mA =	4mA = 20mA =	4mA = 20mA =
F.	Confirm the correct gas is selected for your application in the Gas-SelectX® menu				

Your Notes:

If you are experiencing any problems after completing this procedure, please call the Fox Thermal Service Department at 831-384-4300 to review this information.

Fig. 1.1: FT4X Menu Tree - Main Menu

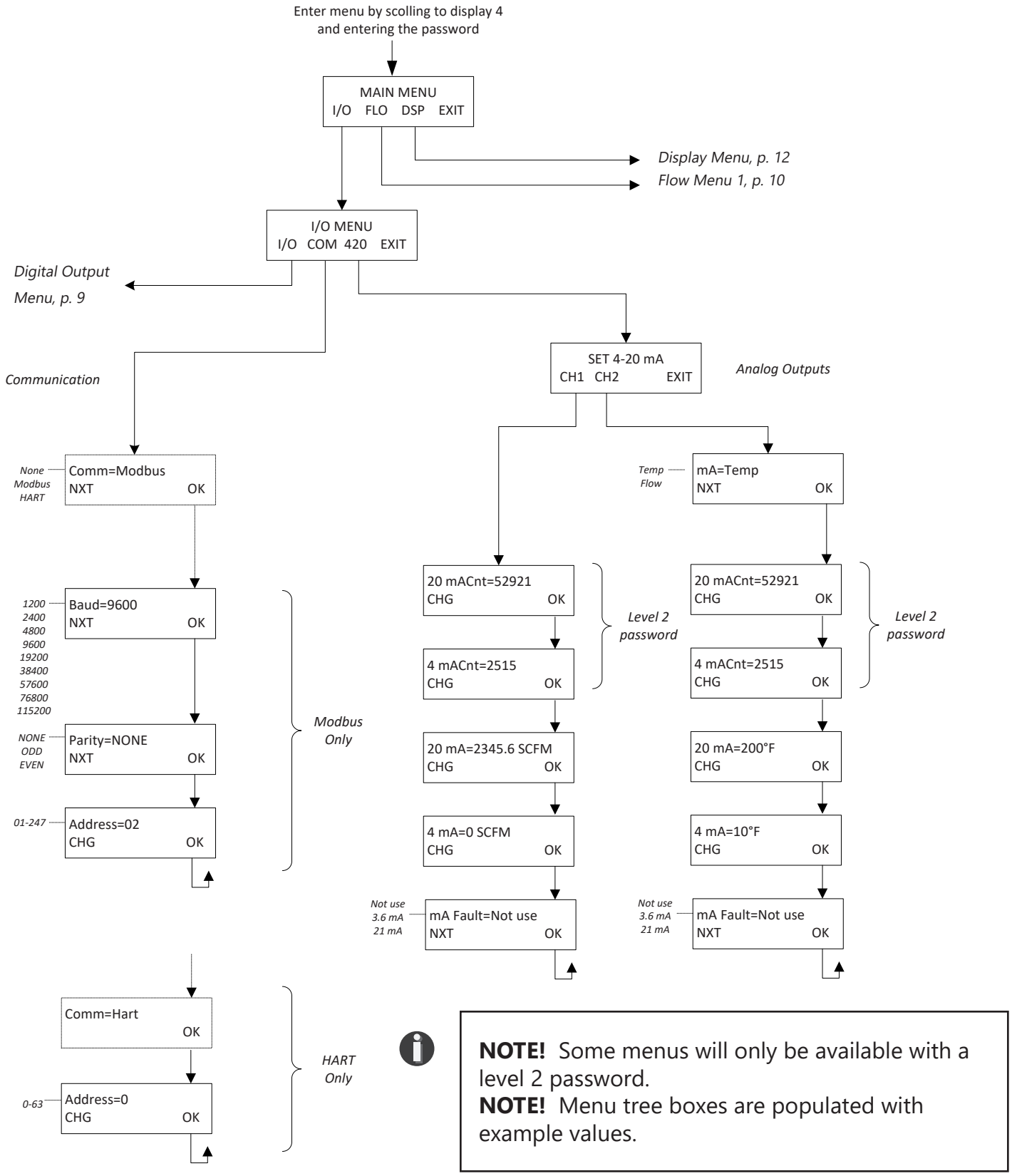

NOTE! Some menus will only be available with a level 2 password.
NOTE! Menu tree boxes are populated with example values.

Fig. 1.2: FT4X Menu Tree - Digital Outputs and Input

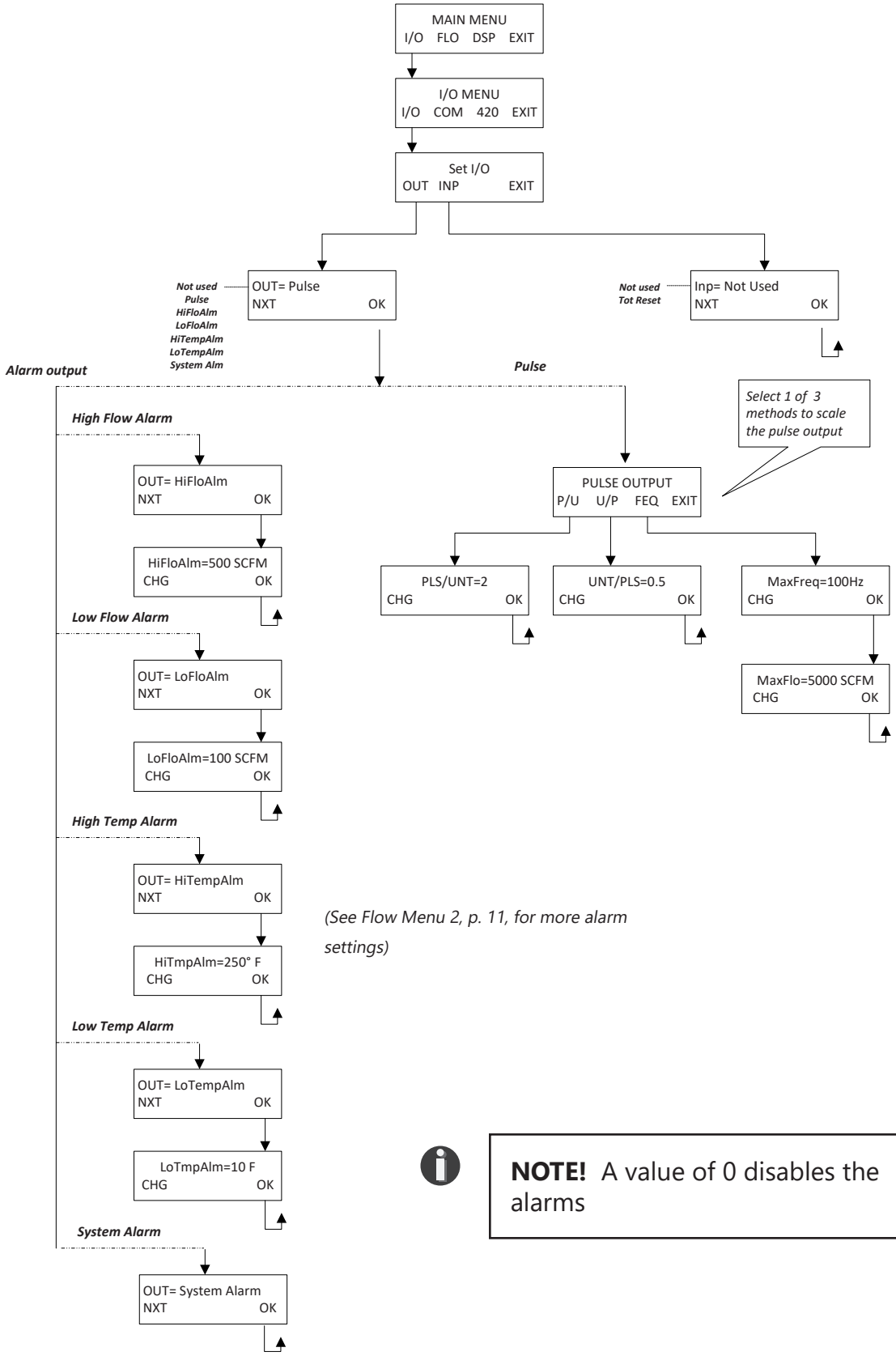

(See Flow Menu 2, p. 11, for more alarm settings)

NOTE! A value of 0 disables the alarms

Fig. 1.3: FT4X Menu Tree - Flow Menu 1

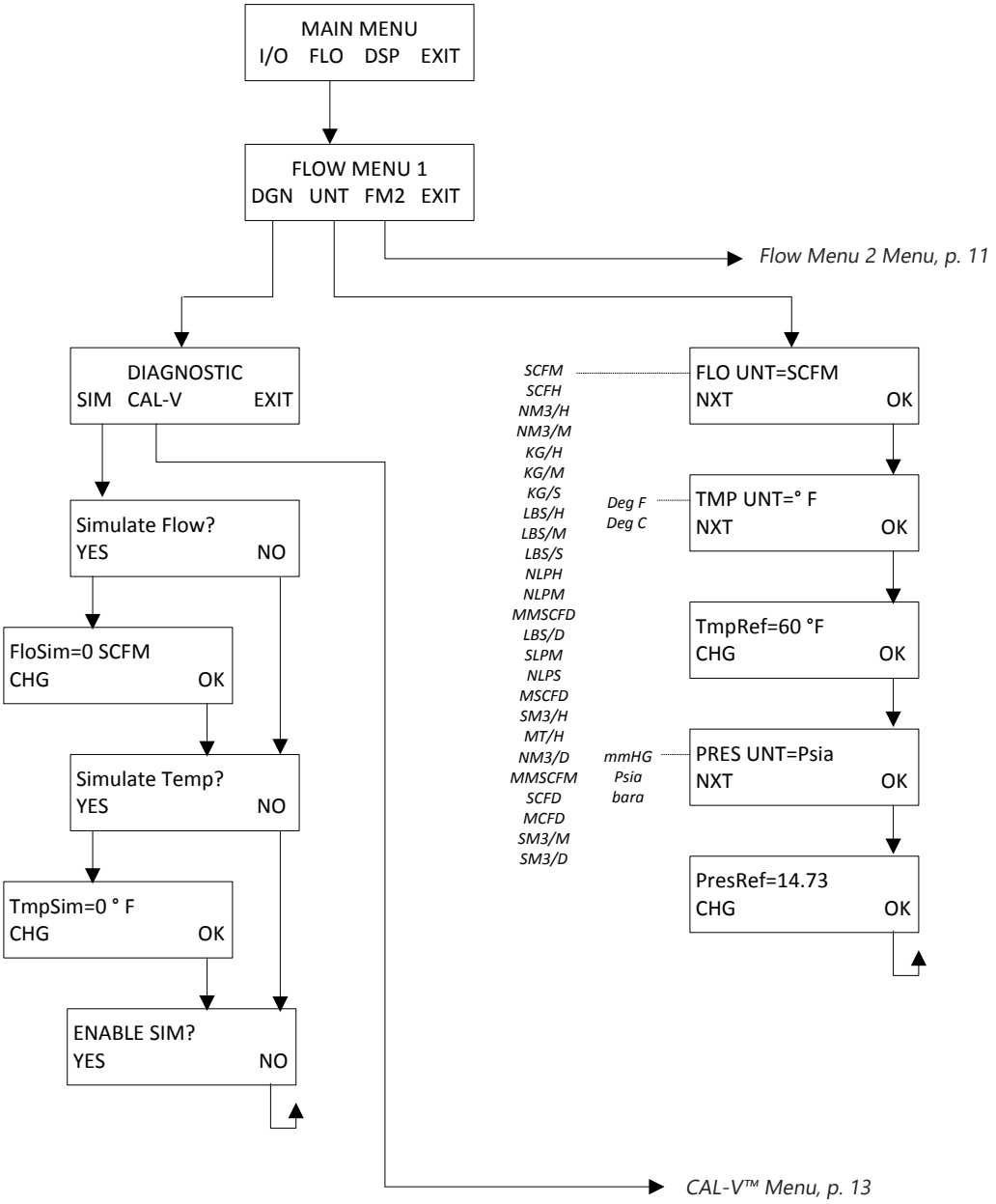

Fig. 1.4: FT4X Menu Tree - Flow Menu 2

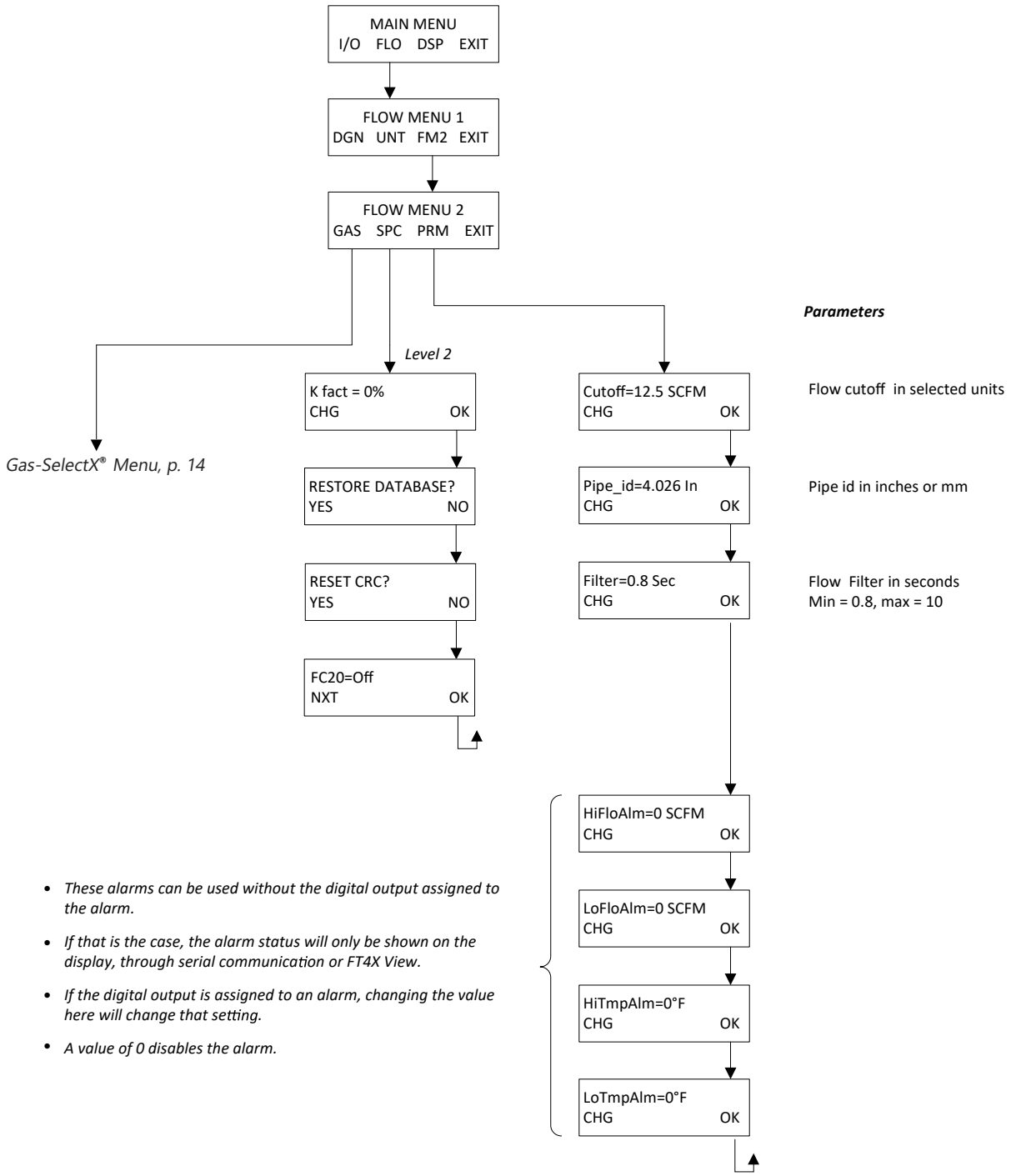

- *These alarms can be used without the digital output assigned to the alarm.*
- *If that is the case, the alarm status will only be shown on the display, through serial communication or FT4X View.*
- *If the digital output is assigned to an alarm, changing the value here will change that setting.*
- *A value of 0 disables the alarm.*

Fig. 1.5: FT4X Menu Tree - Display Menu

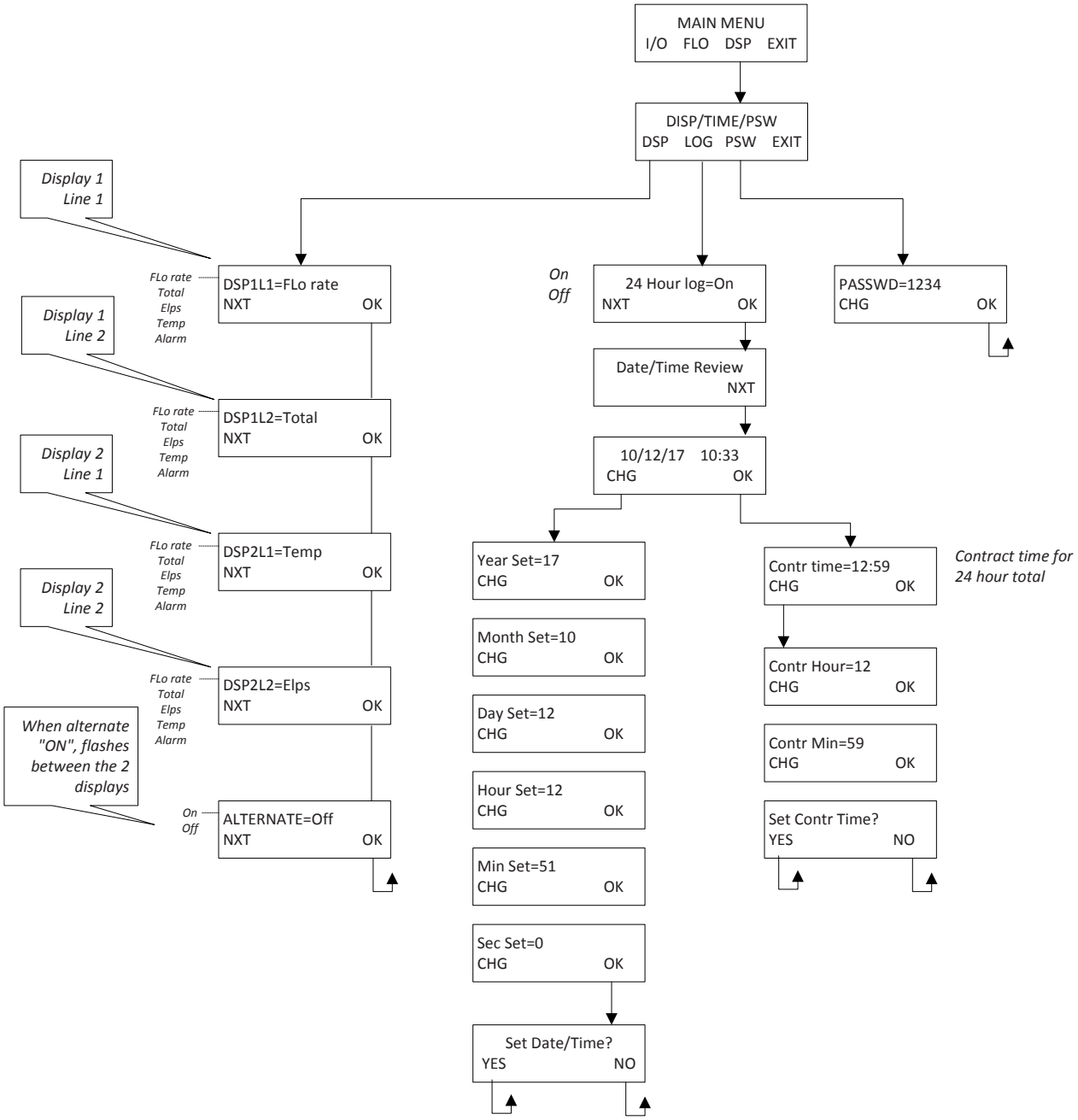

NOTE! All readings updated every second

- *Flo Rate = Flow rate of process gas*
- *Total = Total flow of process gas*
- *Elps = Elapsed time since reset of flow total*
- *Temp = Temperature of process gas*
- *Alarm = Notification of errors; diagnostic errors*

Fig. 1.6: FT4X Menu Tree - CAL-V™ Menu

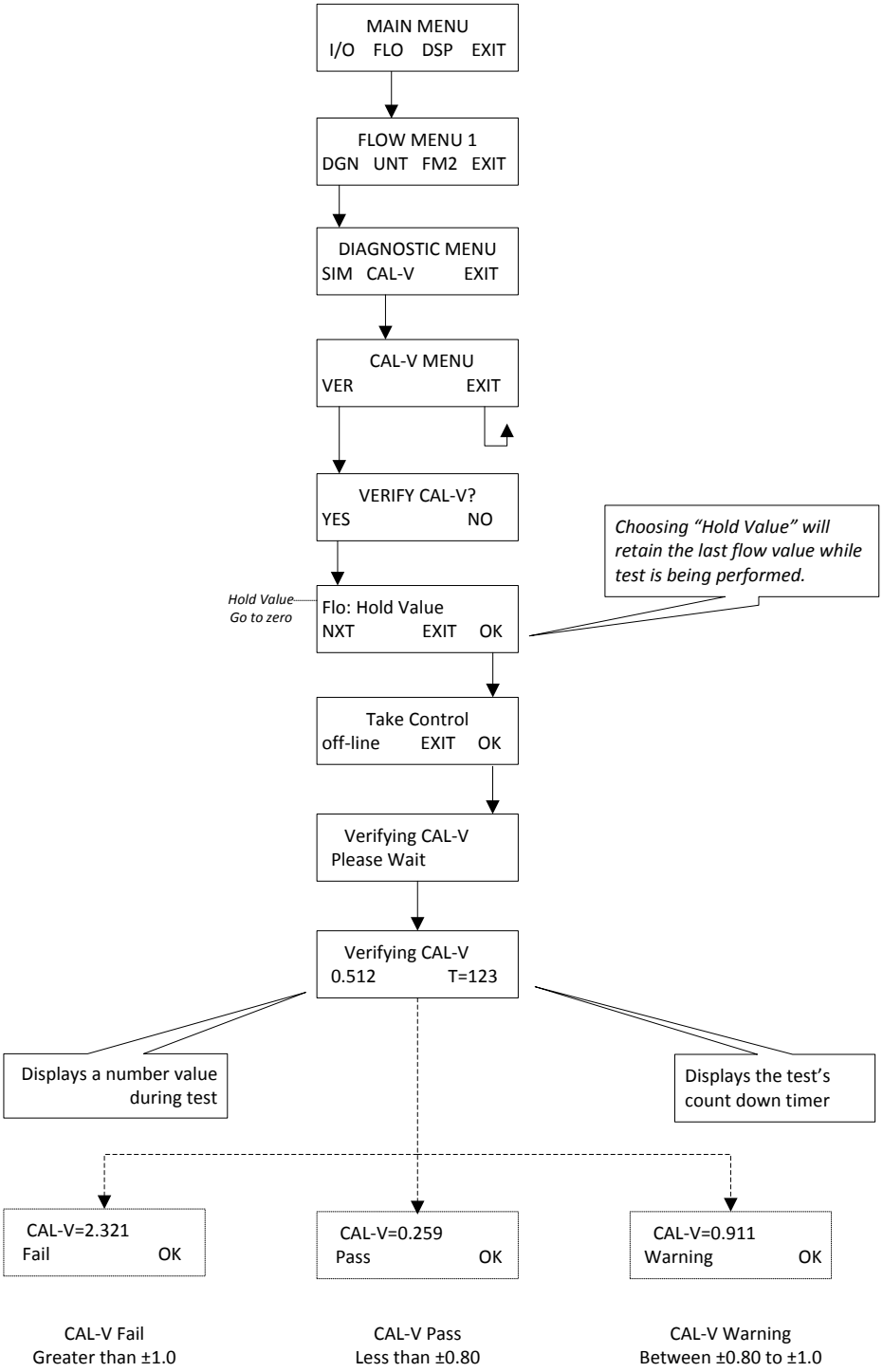

Fig. 1.7: FT4X Menu Tree - Gas-SelectX® Menu

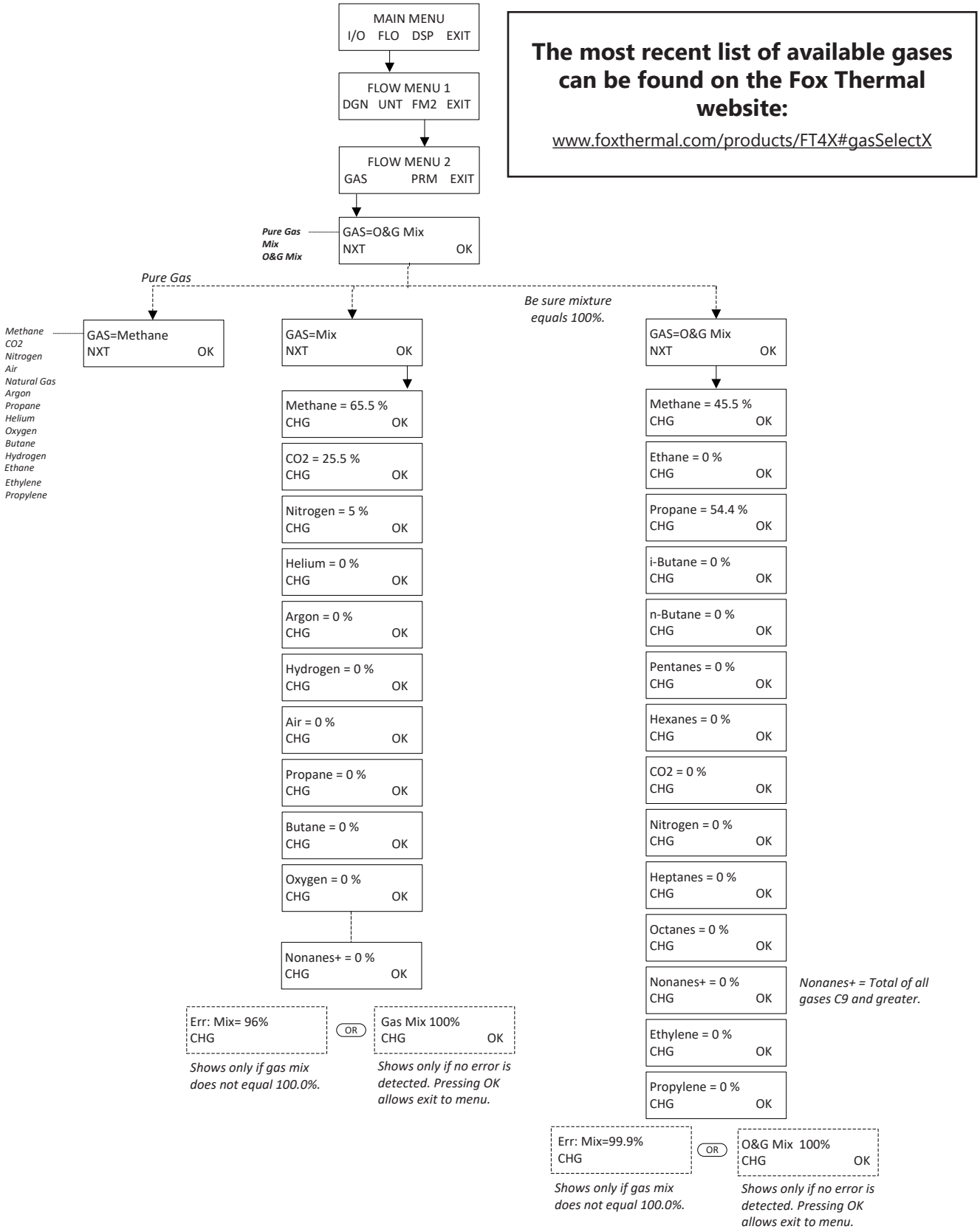

The most recent list of available gases can be found on the Fox Thermal website:

www.foxthermal.com/products/FT4X#gasSelectX

Fig. 1.8: FT4X Menu Tree - Log Menu 1

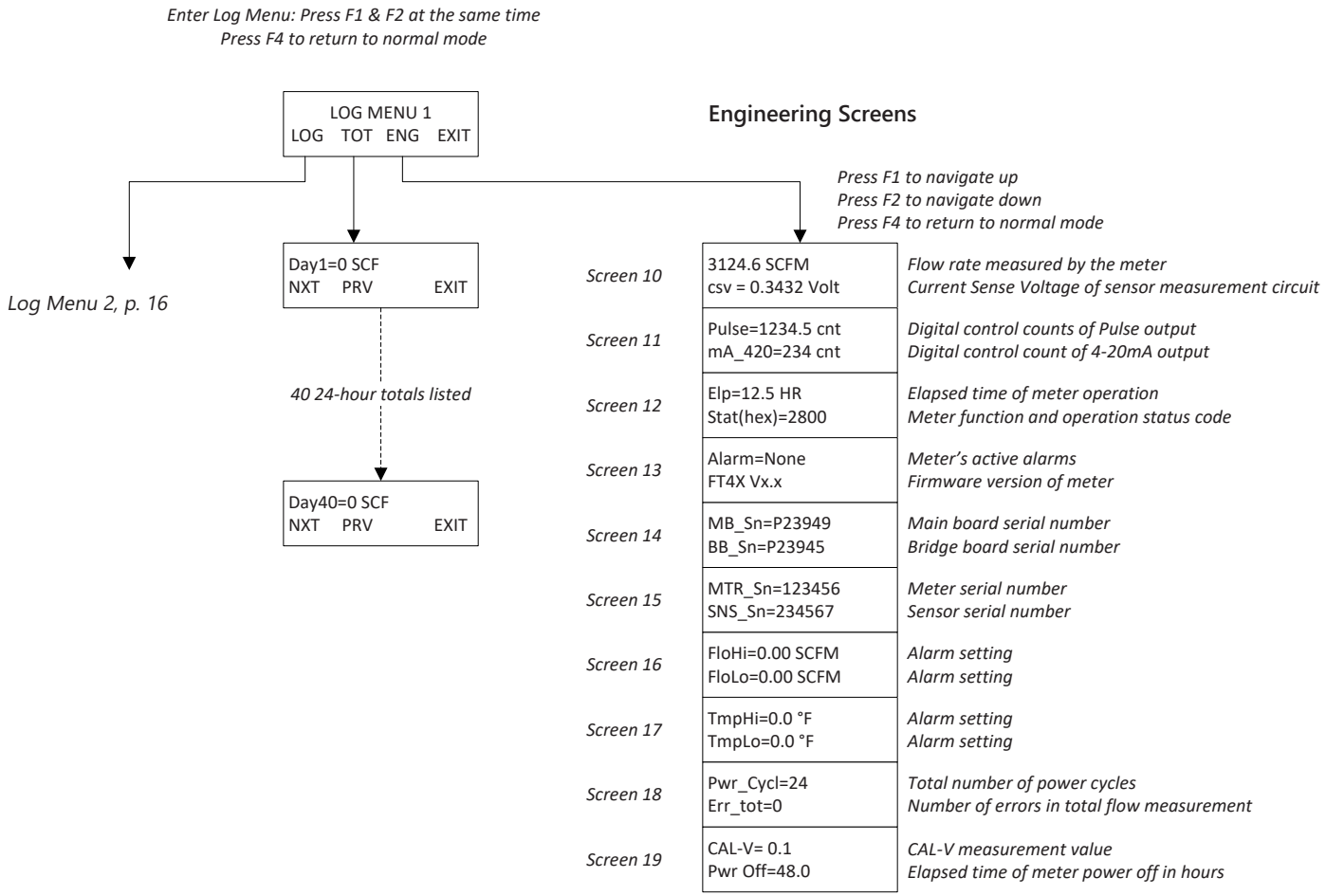

NOTE!

- All values in Log Menu 1 are view only. These values cannot be changed from this menu

Fig. 1.9: FT4X Menu Tree - Reset Flow Total

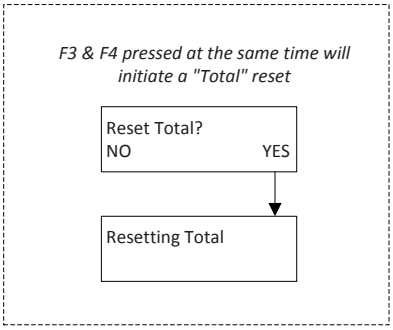

Fig. 1.10: FT4X Menu Tree - Log Menu 2

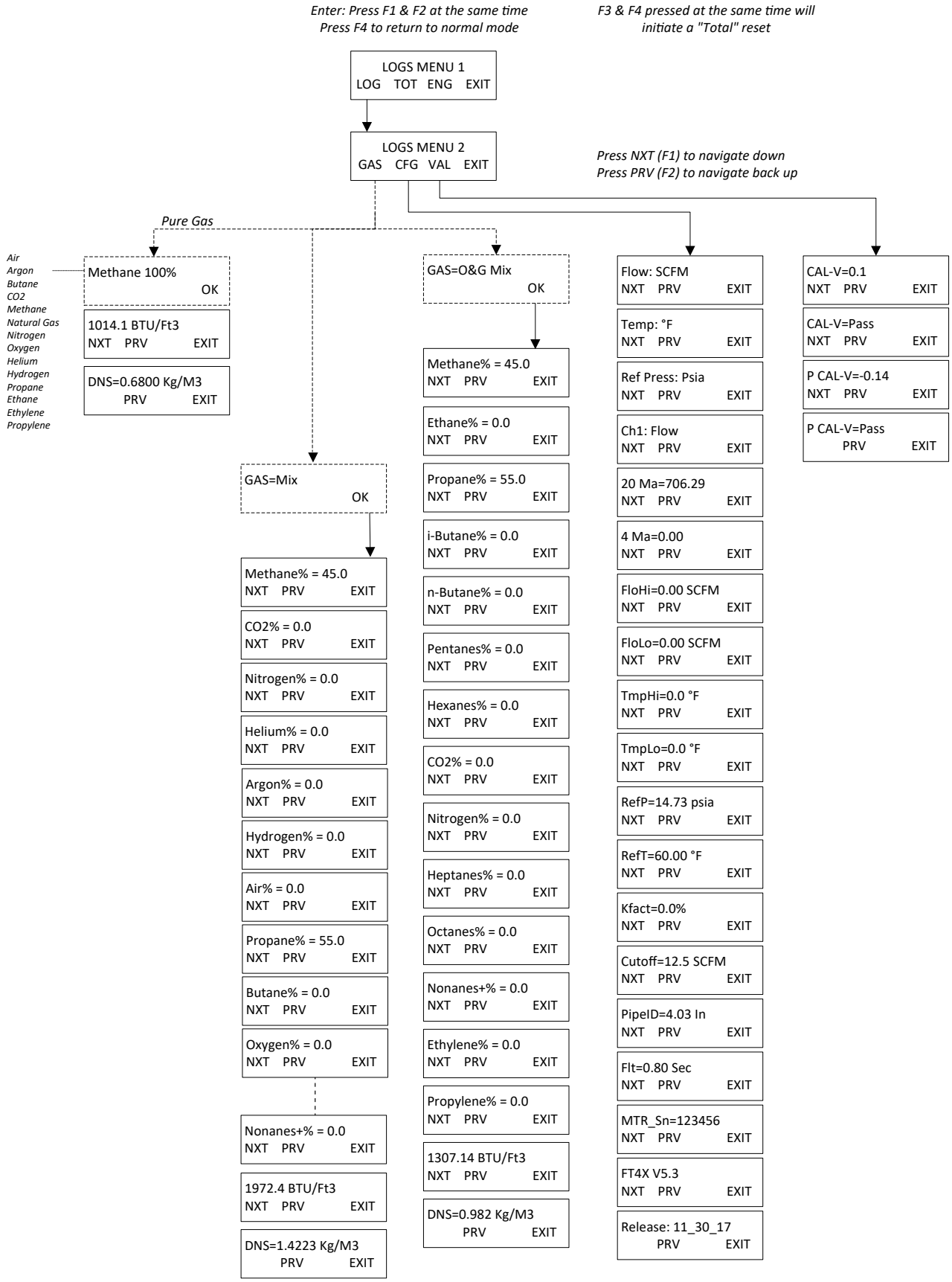

Welcome
Thank you for purchasing the model FT4X thermal gas mass flow meter from Fox Thermal. The FT4X is one of the most technically advanced flow meters in the world. Extensive engineering effort has been invested to deliver advanced features, accurate measurement performance and outstanding reliability.

This instruction manual contains the electrical and mechanical installation instructions as well as details for programming, maintaining and troubleshooting the meter. This manual is divided into the following sections: Introduction, Installation, Wiring, Operation, Communications, Maintenance, Appendices, Definitions, and Index.

Theory of Operation
The model FT4X is an innovative thermal mass gas flow meter and temperature transmitter. It is microprocessor-based and field programmable. The FT4X thermal sensor operates on the law that gases absorb heat. A heated sensor placed in an air or gas stream transfers heat in proportion to the stream's mass velocity. There are two sensor elements. One sensor element detects the gas temperature and a second element is maintained at a constant temperature above the gas temperature. The energy transferred from the heated element is proportional to the mass flow velocity. The FT4X flow meter maintains accurate flow measurement over a large temperature and pressure range.

Mass Flow
The model FT4X measures mass flow; an advantage over other flow meters which measure volumetric flow rate. Volumetric flow is incomplete because temperature and pressure are unknown and must be measured separately. For example, the mass flow of a gas depends on its temperature and pressure. As temperature and pressure changes, the gas volume changes but not its mass. Therefore a device measuring mass flow is independent of temperature and pressure changes. The model FT4X provides a direct measurement of gas flow in mass units (kg/hr, lb/hr), standard units (SCFM, SLPM) or normal units (NM3/hr, NLPM) with no additional temperature or pressure measurements required.

Calibration Validation
Validate the calibration of the FT4X in the field using the CAL-V™ test. The goal of Calibration Validation is to provide operators with the ability to verify that the meter is capturing accurate data at scheduled recalibration times - or at any time - instead of sending the meter back to the factory for recalibration. By performing CAL-V™ in the field, operators can verify that the meter is running accurately by testing the functionality of the sensor and its associated signal processing circuitry. This test can be done in the pipe under normal process conditions.

Flow Calibration
Every Fox Thermal flow meter is set to the customer's configuration at the factory using an App ID which is generated by the on-line configurator. The App ID specifies the gas type, flow range, serial communication and other settings in the meter. If these settings match the final customer application, the meter is ready to use. The Fox Thermal Calibration Lab maintains instrument calibration data on every flow meter. Calibration files include details on process conditions, customer gas, line size and other information. All NIST-traceable equipment utilized for the calibration procedure is identified on the Calibration Certificate, which is sent with every flow meter.

DDC-Sensor™ Technology Description
The Fox Thermal DDC-Sensor™, a Direct Digitally Controlled sensor, is a state-of-the-art technology unlike other thermal flow sensors available on the market. Instead of using traditional analog circuitry, the DDC-Sensor™ is interfaced directly to the FT4X microprocessor for more control, precision, and programmability. The DDC-Sensor™ quickly and accurately responds to changes in process variables by utilizing the microprocessor to determine mass flow rate, totalized flow, and temperature.

Fox Thermal's DDC-Sensor™ provides a technology platform for calculating accurate gas correlations. The FT4X correlation algorithms allow the meter to be calibrated on a single gas in the factory while providing the user the ability to select other gases in the Gas-SelectX® gas menu. Fox Thermal's model FT4X with its DDC-Sensor™, state-of-the-art correlation algorithms, and advanced Data Logger provide an accurate, multi-gas-capable thermal gas flow meter.

I/O Description
The FT4X features two galvanically isolated 4-20mA analog outputs, HART communication, a pulse output, switch input, and Modbus RTU (RS485). There is also a USB port for interfacing with a laptop or computer. The first 4-20mA output can be used for HART communication. The second 4-20mA output can be configured for flow rate or process gas temperature and can be scaled by the user. The pulse output can be used for pulse or alarm and is programmable to represent flow rate. The switch input can be configured to reset the flow totalizer and elapsed time.

Software
Fox Thermal offers two powerful software solutions: FT4X View™ and ModbusView™. These applications provide users with efficient access to meter measurement data, configuration settings, Gas-SelectX® settings and CAL-V™ functions using a laptop or PC. ModbusView™ can interface with FT4X meters that have the Modbus serial communication option. FT4X View™ connects through the USB port of FT4X meters. Both software applications are available for download on the Fox Thermal website.

FT4X Data Logger
The model FT4X has a Data Logger board used to record daily totals and configuration changes/ events (i.e. power on/off, alarms).

The FT4X Data Logger supports 40 daily total records. The meter is shipped with this function turned off and must be activated by the user after the unit is powered on. When the number of samples exceeds 40, the old data will be overwritten. Only the most recent 40 records are kept and day #1 is always the latest total recorded.

Model FT4X firmware v6.0 and later have been equipped with Quality Transaction Record (QTR) functionality per *API MPMS 21.1 Chapter 5.2* (linear type meters). Refer to the FT4X View™ Software Manual for data downloading instructions. Data that can be downloaded through FT4X View™ includes hourly and daily averages and totals. This data is saved for seven years as required by API 21.1.

FT4X Functional Diagram

An on-board 2 line x 16 character backlit LCD display shows flow rate, total flow, elapsed time, process gas temperature, and alarms. The display is also used in conjunction with the Configuration Panel for field configuration of flow meter settings such as gas selection, 4-20mA scaling, pulse output scaling, pipe area, flow cutoff, flow filtering, display configurations, diagnostics, communication parameters, data logging, and alarm limits.

Fig. 1.11: FT4X Function Diagram

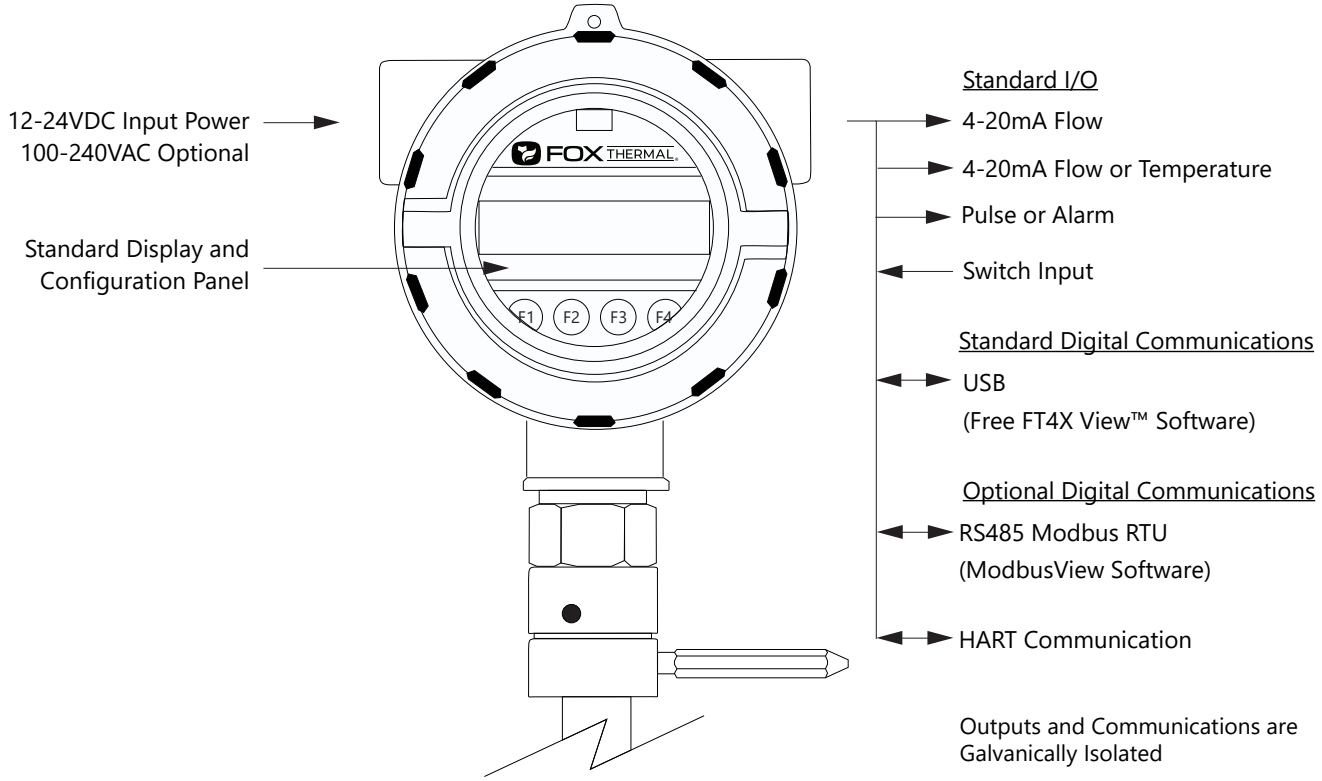

Installation Scope
This section describes how to install the Fox Thermal model FT4X Flow Meter:

For Insertion Types:

1. Determine lateral position on the pipe.
2. Determine radial position of probe if moisture or condensation is present in the gas.
3. Verify sensor installation depth.
4. Determine sensor orientation in relation to sensor length and direction of flow.
5. Determine if the display orientation must be changed.
6. Ensure proper tightening of compression fitting for mounting meter.

For Inline Types:

1. Determine lateral position on the pipe.
2. Flow body orientation in relation to direction of flow in pipe.
3. Changing the display orientation.
4. Proper tightening of compression fitting.

Installation procedures must be performed using a combination of the end user's best engineering practices, in compliance with local codes, and with manufacturer's recommendations.

General Precautions
The following general precautions should be observed:

1. Exercise care when handling the flow meter to avoid damaging the probe, sensor or enclosure.
2. Close any unused conduit openings in the enclosure with plugs certified for your application.
3. The enclosure cover must be closed except during installation or configuration.
4. Mounting FT4X in direct sunlight can cause the temperature inside the enclosure to increase beyond design limits, resulting in failure of LCD display and reduced component life. It is recommended that a sunshade be installed to avoid direct sunlight (see maximum enclosure operating temperature specification).
5. Ensure the flow direction indicator/pointer for the meter is in line with the direction of flow in the pipe.
6. Do not install the FT4X enclosure near an igniter, igniter-controller or switching equipment.
7. Do not install an external power supply in a cabinet containing an igniter controller or switching equipment.
8. For accurate flow measurement, review flow meter placement instructions before installation to ensure a proper flow profile in the pipe.
9. For safety reasons, Teflon ferrules are only appropriate for applications with pressures of 60 psig or less. At higher pressures, use of a Teflon ferrule risks unwanted probe movement or ejection of the probe from the pipe. For all applications above 60 psig, the standard stainless steel ferrule is required.

Instructions for Flow Meter Lateral Placement

Install the model FT4X flow meter so that it is far enough away from bends in the pipe, obstructions, or changes in line sizes to ensure a consistent flow profile. See Fig. 2.1 below for your meter type.

Fig. 2.1: Upstream and Downstream Pipe IDs for Insertion and Inline Flow Meters

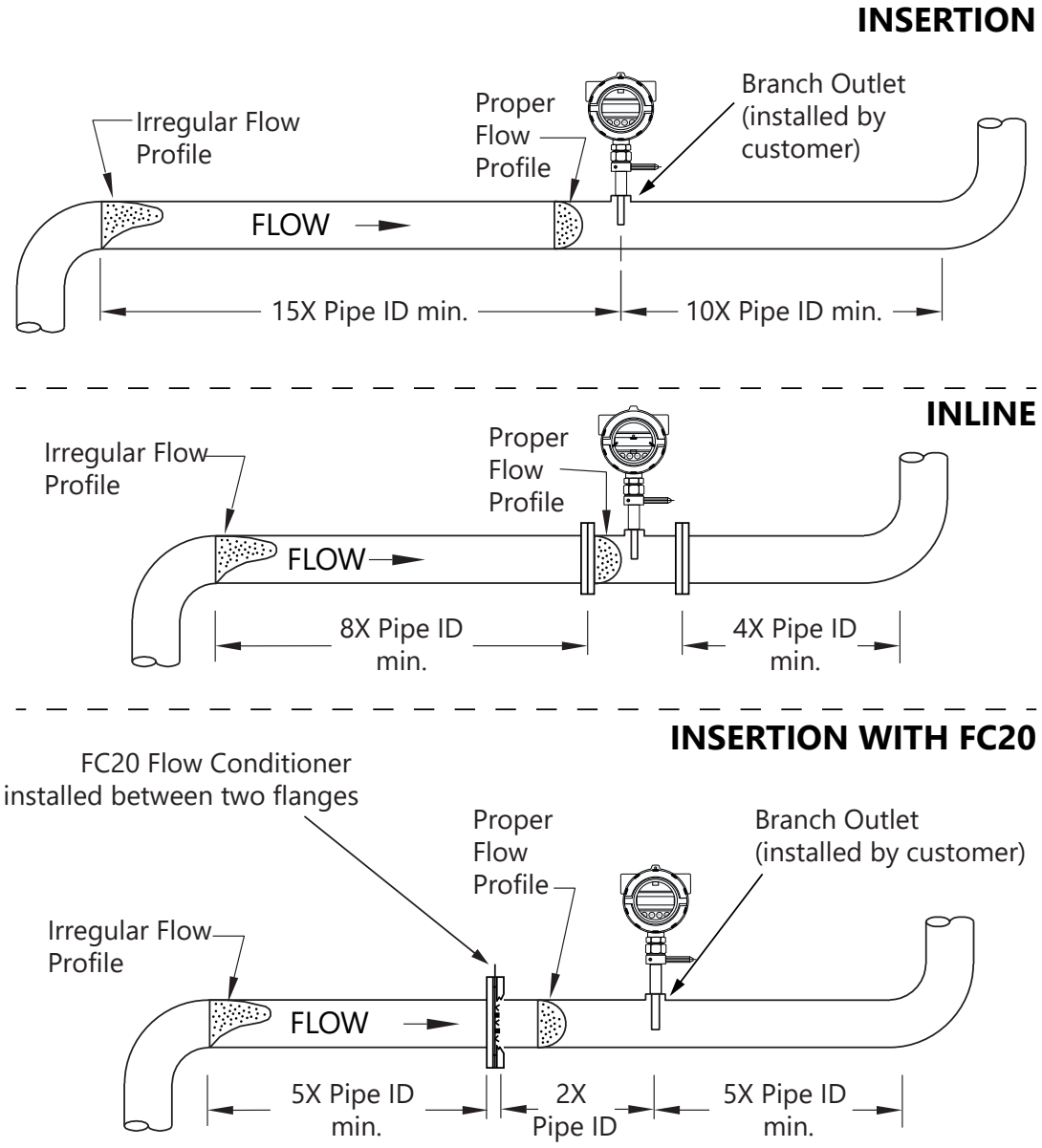

NOTE!
- Pipe ID = Inside Diameter
- The probe diameter is ¾" (standard) or ½" (optional)
- An irregular flow profile will affect sensor accuracy
- See FC20 Installation Instructions (PN109193) for more information

Radial Probe Position - Moisture in the Gas or Condensation
The radial position of the meter may help reduce collection of moisture on the sensor. Condensing liquids contacting the meter's sensing elements will disrupt accurate flow measurement. Fox Thermal recommends the flow meter be used in dry gas conditions whenever possible for highest accuracy. Contact Fox for further recommendations.

Fig. 2.2: Installation at 180°

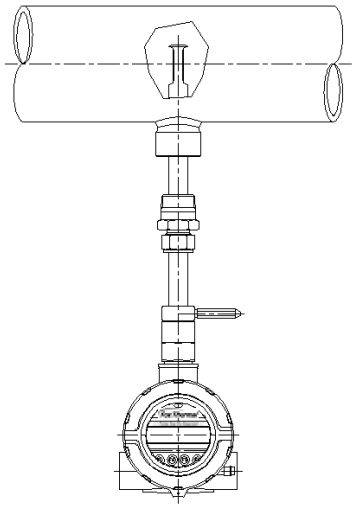

Alternate Installations - Vertical Pipes or Restricted Installation Spaces
When restricted physical installation space exists, the FT4X can also be installed at other angles. Please note that the display and the enclosure orientation can be rotated in 90º increments.

Fig. 2.3: Alternate Installation at 90° (CCW)

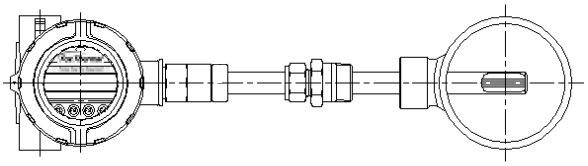

Welding Branch Fitting to Pipe

The probe of the FT4X must be installed perpendicular to the pipe to measure flow accurately. Use the following steps to ensure that the 1" branch fitting is correctly welded to the pipe.

Directions:

1. Drill a hole through one wall of the pipe. The hole must be 0.781" (25/32") for the 3/4" diameter probe or 0.531" (17/32") for the 1/2" diameter probe option.
2. Assemble the compression fitting and branch fitting hand tight onto the probe of the FT4X.
3. Insert the probe into the hole in the pipe and use the FT4X probe and compression fitting to align the branch fitting with the hole and the probe perpendicular to the pipe.
4. Tack-weld the branch fitting carefully onto the pipe.
   - Before welding the fitting completely, verify the probe is aligned to the center of the pipe and the hole is centered in the branch fitting (see Figure 2.4).
5. To verify that the correct position has been achieved, carefully slide the probe in and out of the branch fitting and hole.

WARNING! Do not force the probe through the hole. Forcing it through the hole can damage the probe.

6. Verify that the temporary weld of the branch fitting positions the probe window on the pipe's centerline.
   - The picture on the right side of Figure 2.4 shows an incorrect welding of the branch fitting, causing the probe to be "off center".
7. Once the branch fitting is aligned properly, remove the probe from the branch fitting and finish welding. Then verify the probe is still aligned with the center of the pipe.
8. Set the depth of the flow meter (see "Fig. 2.5: Insertion Sensor Depth in Pipe" on page 24).
   - Do not tighten compression fitting until proper depth of flow meter is determined.

Fig. 2.4: Alignment of Branch Fitting

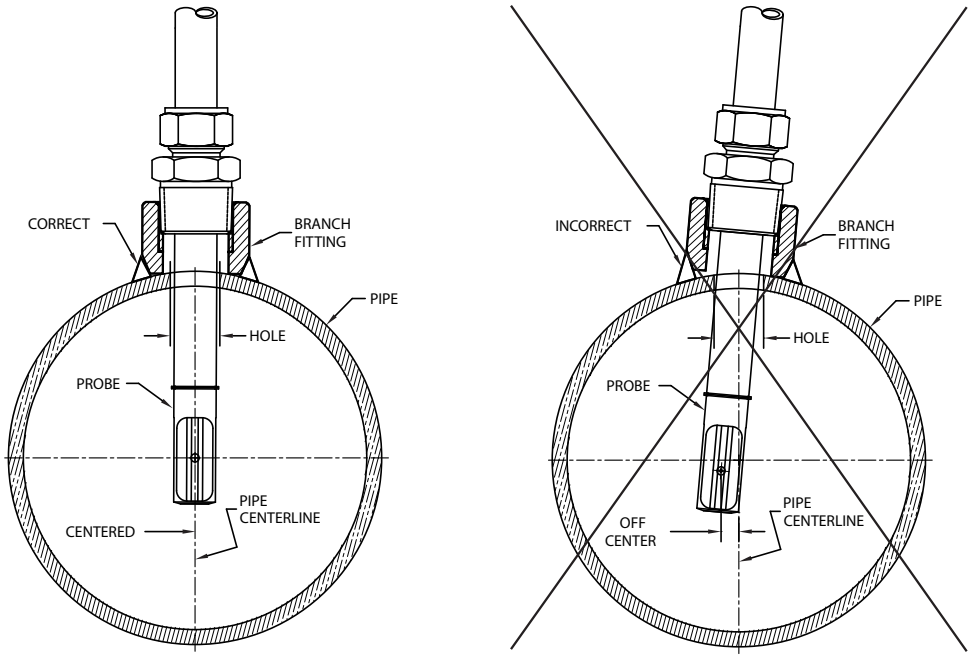

Installation Depth

The installation depth of the sensor in the pipe is dependent on the pipe size. To get the most accurate reading, proper placement of the sensor window within the pipe is necessary. As shown in Fig 2.5, the end of the sensor window should be 0.73" (18.5 mm) past the center line of the pipe. Review the dimensional drawing below with the following equation to calculate insertion depth:
L +D/2 + .73" = insertion depth.
Insertion depth is measured from the top of the compression fitting to the bottom end of the probe.

CAUTION! For a 1½" pipe, do not tighten compression fitting without 0.2" distance from wall or damage to probe will occur.

Fig. 2.5: Insertion Sensor Depth in Pipe

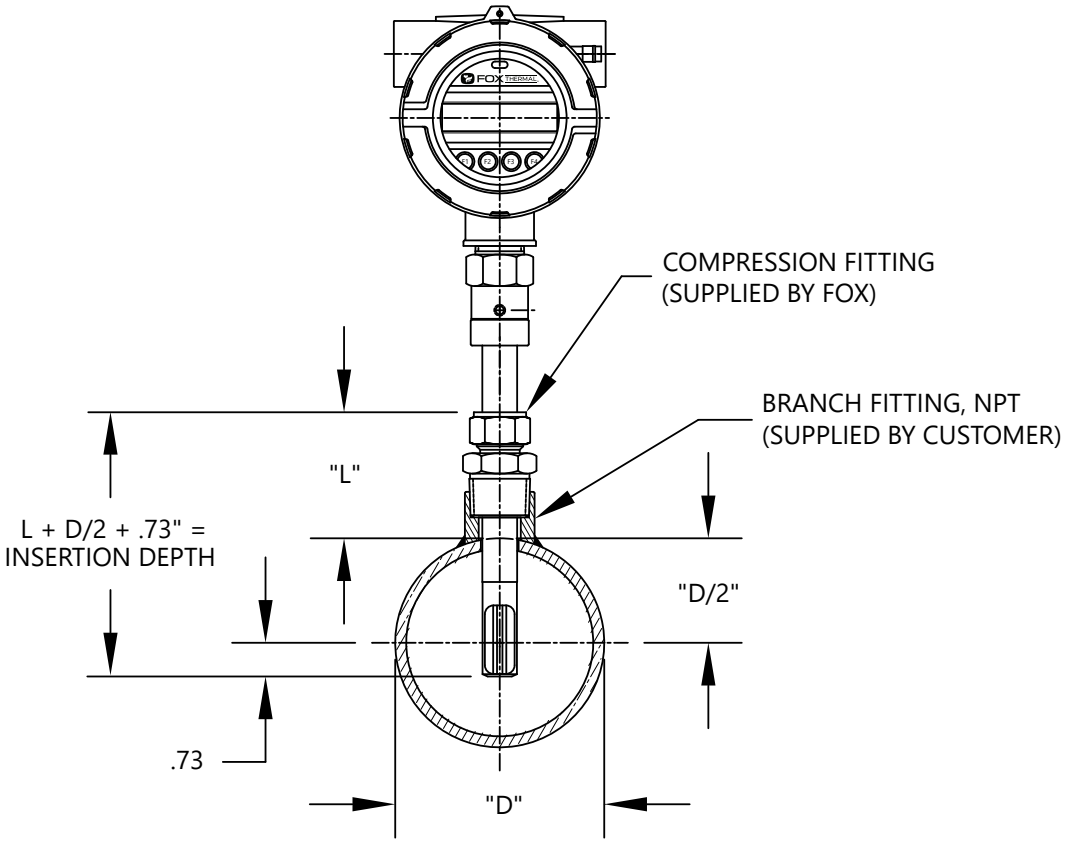

Mounting Instructions - Compression Fittings (New Insertion Meters Only)
FT4X insertion style flow meters are mounted through a hole and a female NPT branch outlet in the customer's pipe. Insertion style flow meters are not designed for use in pipes smaller than 1½".

- Install the compression fitting into the female NPT branch outlet.
- When installing in a 2" pipe or larger, install the end of the probe 0.73" (18.5 mm) past the center line of the pipe (refer to figure 2.5).
- When installing into a 1½" pipe, carefully install the probe into the pipe until it touches the opposite wall and pull back 0.2".
- Rotate the nut finger-tight.
- Further tighten the nut just enough until the tube will not turn by hand or move axially in the fitting.
- Mark the nut at the 6 o'clock position.
- While holding the fitting body steady, tighten the nut one and one-quarter (1 ¼) turns to the 9 o'clock position. See Figure 2.6.

Fig. 2.6: Proper Tightening of the Compression Fitting Nut

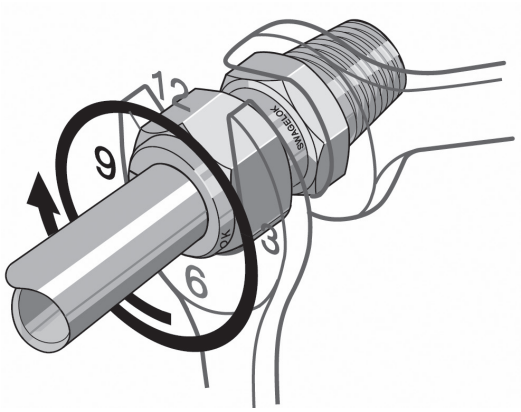

NOTE! Before removing a probe with compression fitting, mark the tube at the back of the nut, and mark a line along the nut and fitting body. Use these marks when reinstalling the probe. Reference the instructions on p. 26.

NOTE! When installing a probe with compression fitting that has been tightened previously, use the instructions on p. 26.

CAUTION! For a 1½" pipe, do not tighten compression fitting without 0.2" distance from wall or damage to probe will occur.

CAUTION! Once the stainless steel compression fitting ferrule is locked onto the probe, the probe can be removed or rotated, but the insertion depth is locked in place.

CAUTION! If the stainless steel or teflon ferrules are not properly tightened, and/or the recommended pressure is exceeded, the ferrules can slip on the stainless steel tubing causing damage to the meter or bodily harm.

Mounting Instructions - Compression Fittings (Inline and Insertion Meters Previously Installed)
In cases where a compression fitting has already been swaged in an inline flow body or an insertion meter, use the following procedure.

- Carefully insert the probe with swaged ferrules into the fitting until the front ferrule seats against the fitting (see Figure 2.7).
- Verify that the probe is installed the correct depth in the pipe (refer to Figure 2.5 on p. 24).
- Rotate the nut with a wrench until the probe and nut are in their previously marked positions, or you feel a significant increase in resistance (see Figure 2.7).
- Tighten the nut slightly (approximately 1/8 turn).

Fig. 2.7: Proper Re-Tightening of the Compression Fitting Nut

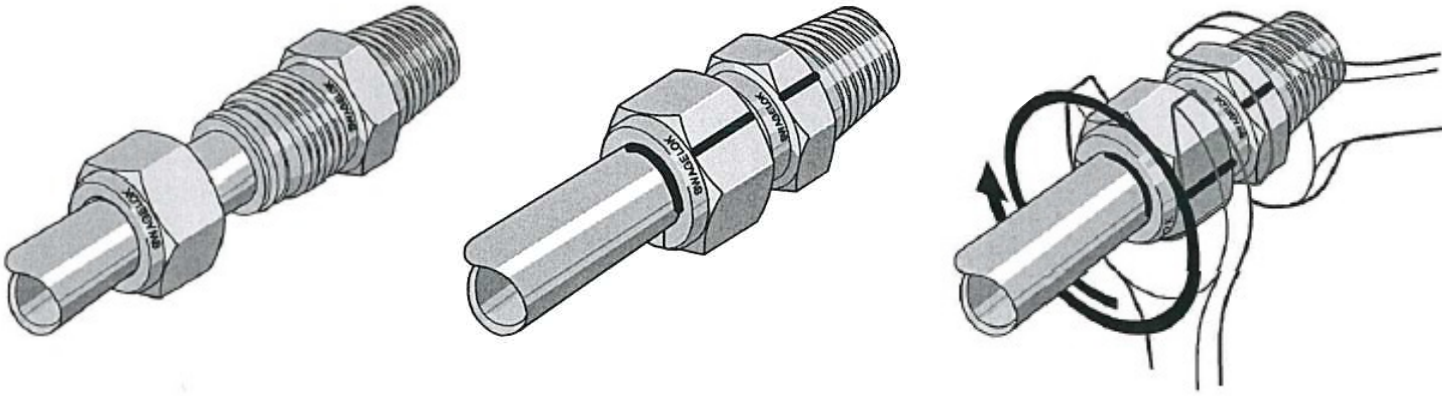

CAUTION! Do not use a gap inspection gauge with reassembled fittings.

Rotating the Enclosure
The model FT4X enclosure has been designed to allow the enclosure to rotate for optimal viewing of the display. To rotate the enclosure, first loosen the two set screws near the Flow Direction Indicator. Then rotate the enclosure into the desired position and tighten the set screws. Do not rotate the enclosure more than 360 degrees.

Direction of Flow and Orientation of the Probe
Install the meter with the flow direction indicator pointing in the direction of flow and centered on the middle of the pipe. The rotational misalignment of the flow direction indicator must be less than 2 degrees.

Fig. 2.8: Orientation of Flow Meter

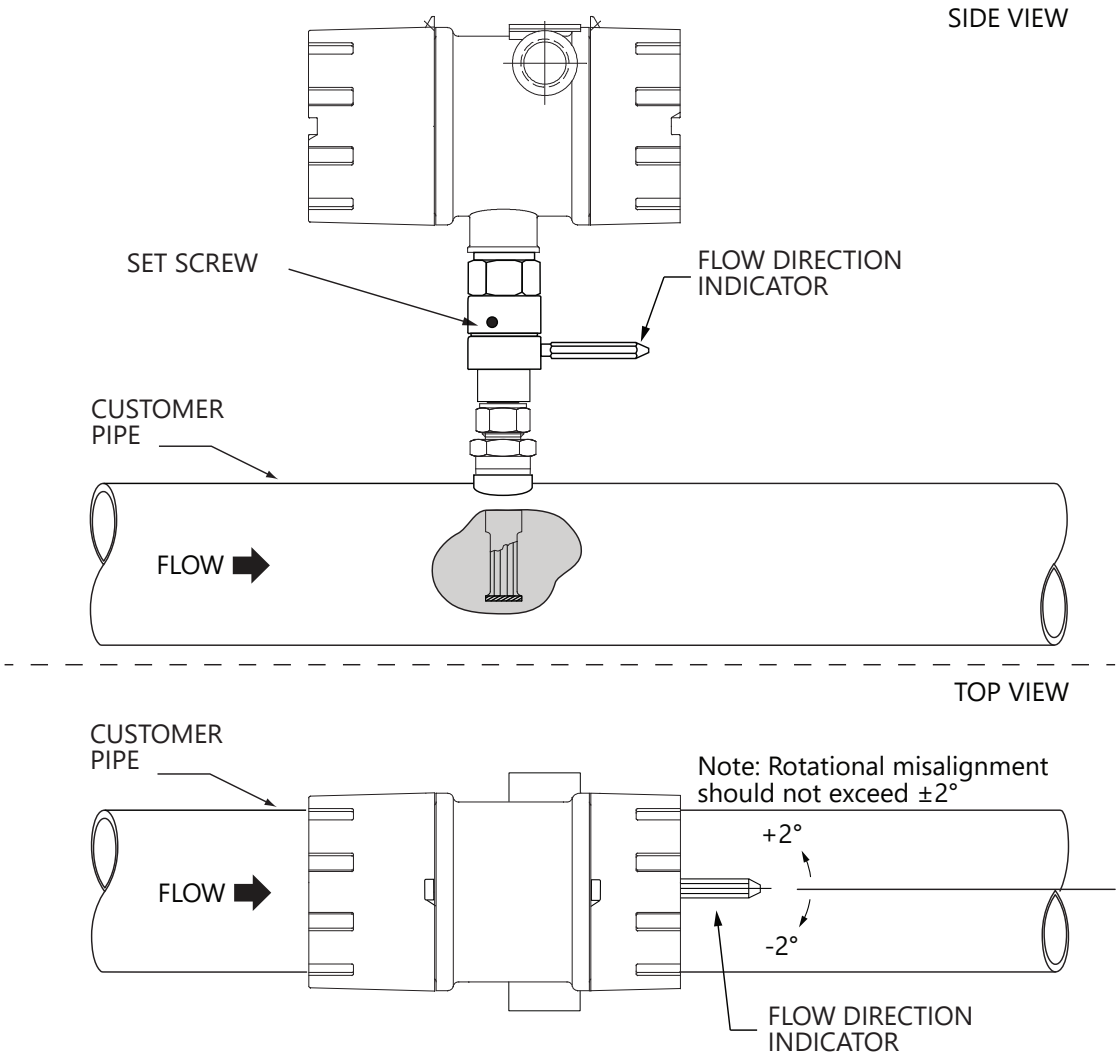

Changing the Orientation of the FT4X Display

The display can be rotated in 90° increments for optimum viewing of the screen. First, open the enclosure by unscrewing the enclosure cap and loosen the two captive screws to open the display assembly. Detach the display board from the metal shield by loosening the three screws on the back of the round shield. Rotate the display board to the desired orientation. Ensure that the display cable is routed flat and straight through the display hinge to prevent binding. Reattach the display board to the metal shield by tightening the three screws. Close the display assembly and secure it to the enclosure with the two captive screws. Finally, install the enclosure cover back on the front of the enclosure.

Fig. 2.9: Rotating the Display Orientation

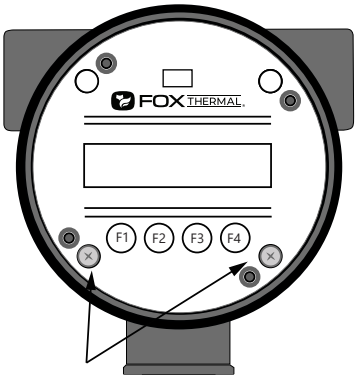

Loosen these two screws to open the display.

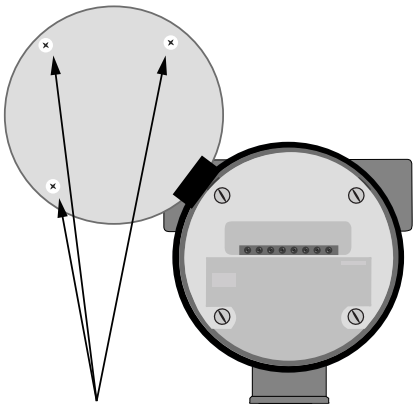

Loosen these three screws to rotate the display in 90° increments (±180°).

Installation of a New Retractor Assembly

1. Remove collar clamp from probe using a 3/16" Hex Key.
2. Remove meter probe from retractor assembly and leave the ball valve open. Keep the collar spacer on the probe so it is not misplaced.
3. Install the valve assembly on the pipe, by tightening the Hex Nipple with a wrench.

Fig. 2.10: Retractor Assembly With and Without Probe Installed

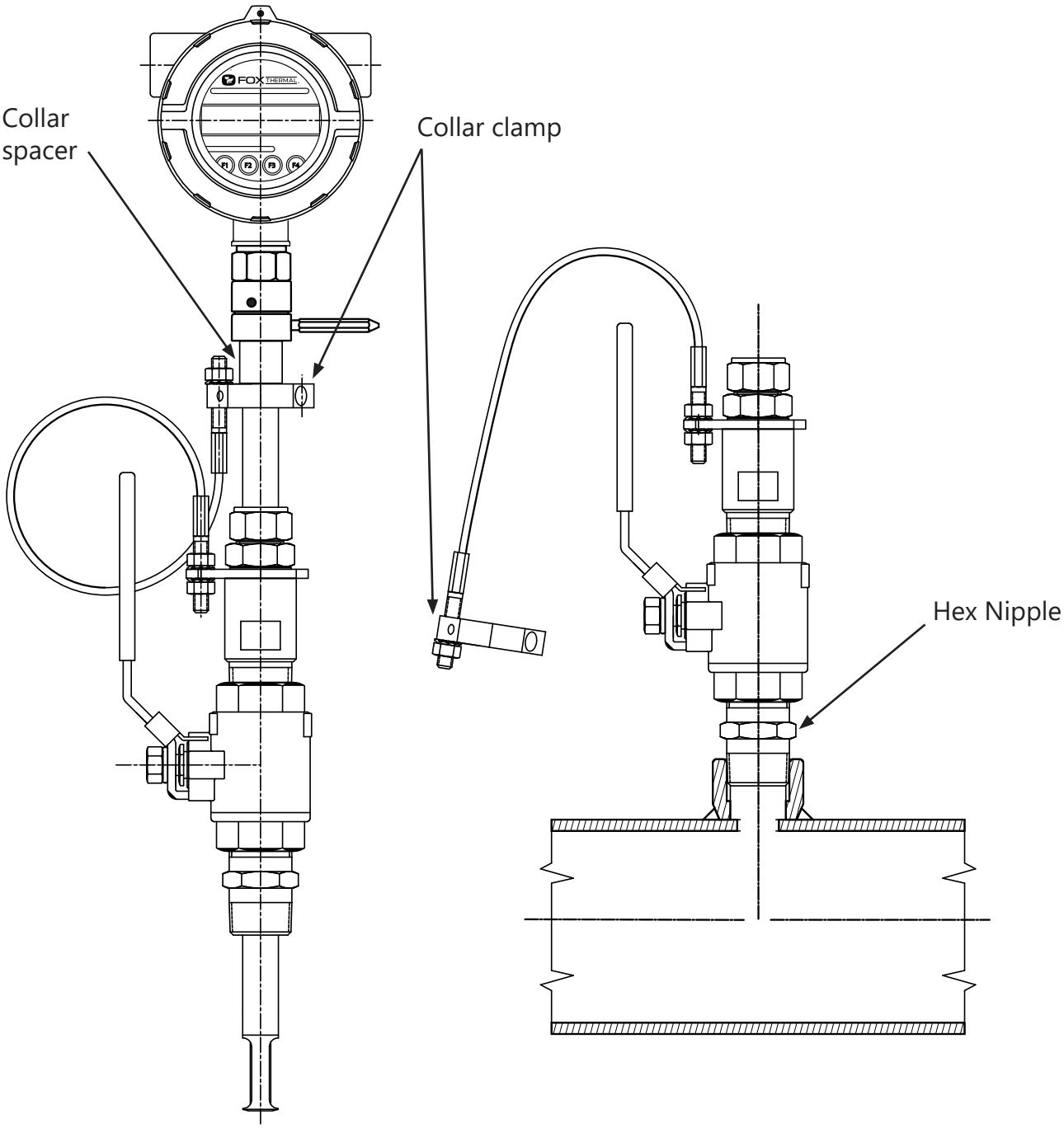

4. Carefully slide the probe through the retractor assembly and through the hole to see if there is interference by touching the pipe wall with the end of the probe on the far side or until the probe cannot go deeper. Remove the probe. Remove the retractor and rework the hole, if required.

Fig. 2.11: Verify Probe Insertion

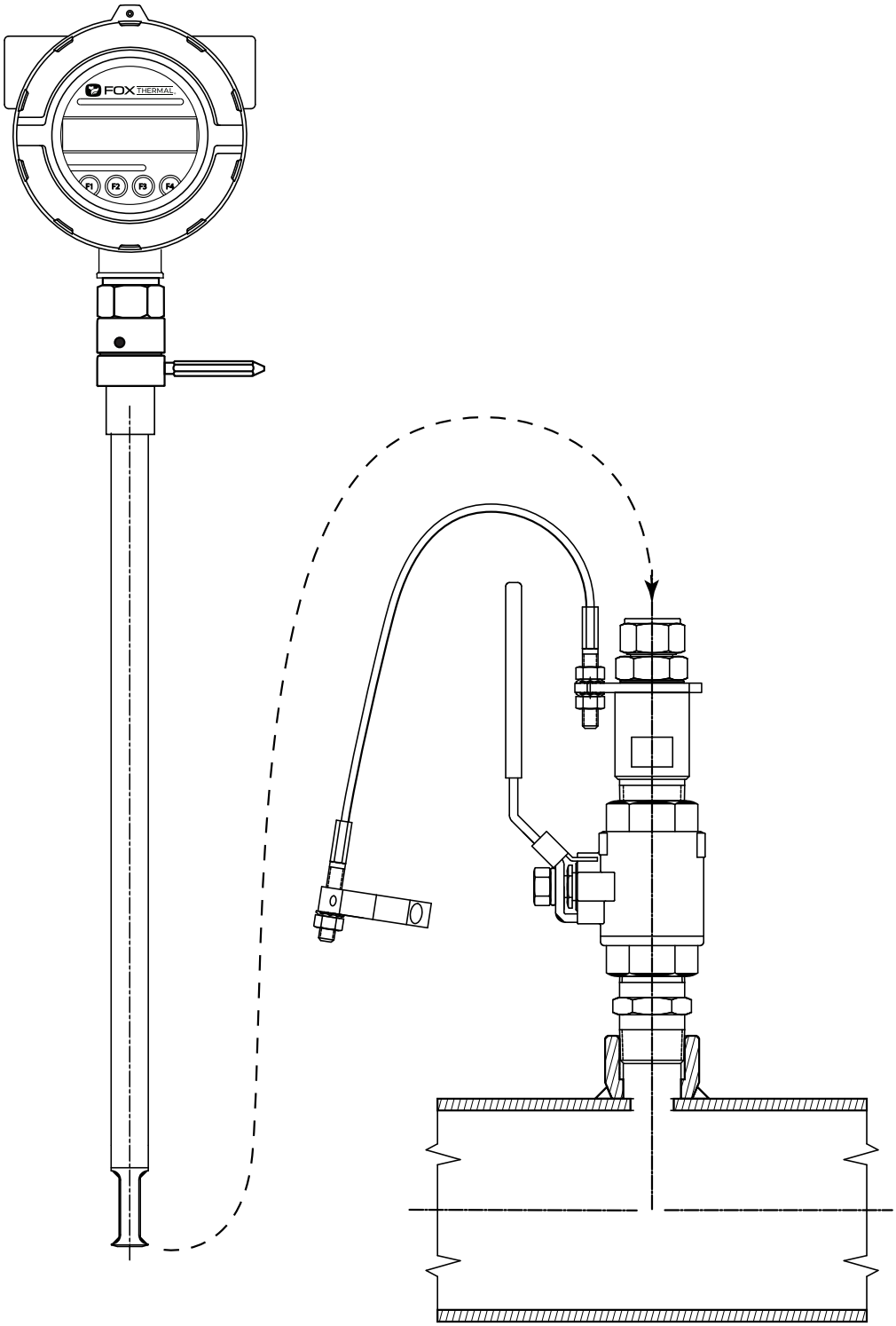

5. Using the equation (L + D/2 + 0.73") from Figure 2.12, calculate the insertion depth and mark on the probe while measuring from the end of the probe.
6. The Retractor Clearance table of Figure 2.12 lists the space required to remove the meter from the retractor. Use the model code of your meter to determine the dimension.

Fig. 2.12: Determining and Marking Insertion Depth

RETRACTOR CLEARANCE	
CODE	"RC" DIMENSION
15R	23.9" [60.7 CM]
18R	26.5" [68.3 CM]
24R	32.5" [83.6 CM]
30R	38.5" [98.8 CM]
36R	44.5" [114.0 CM]

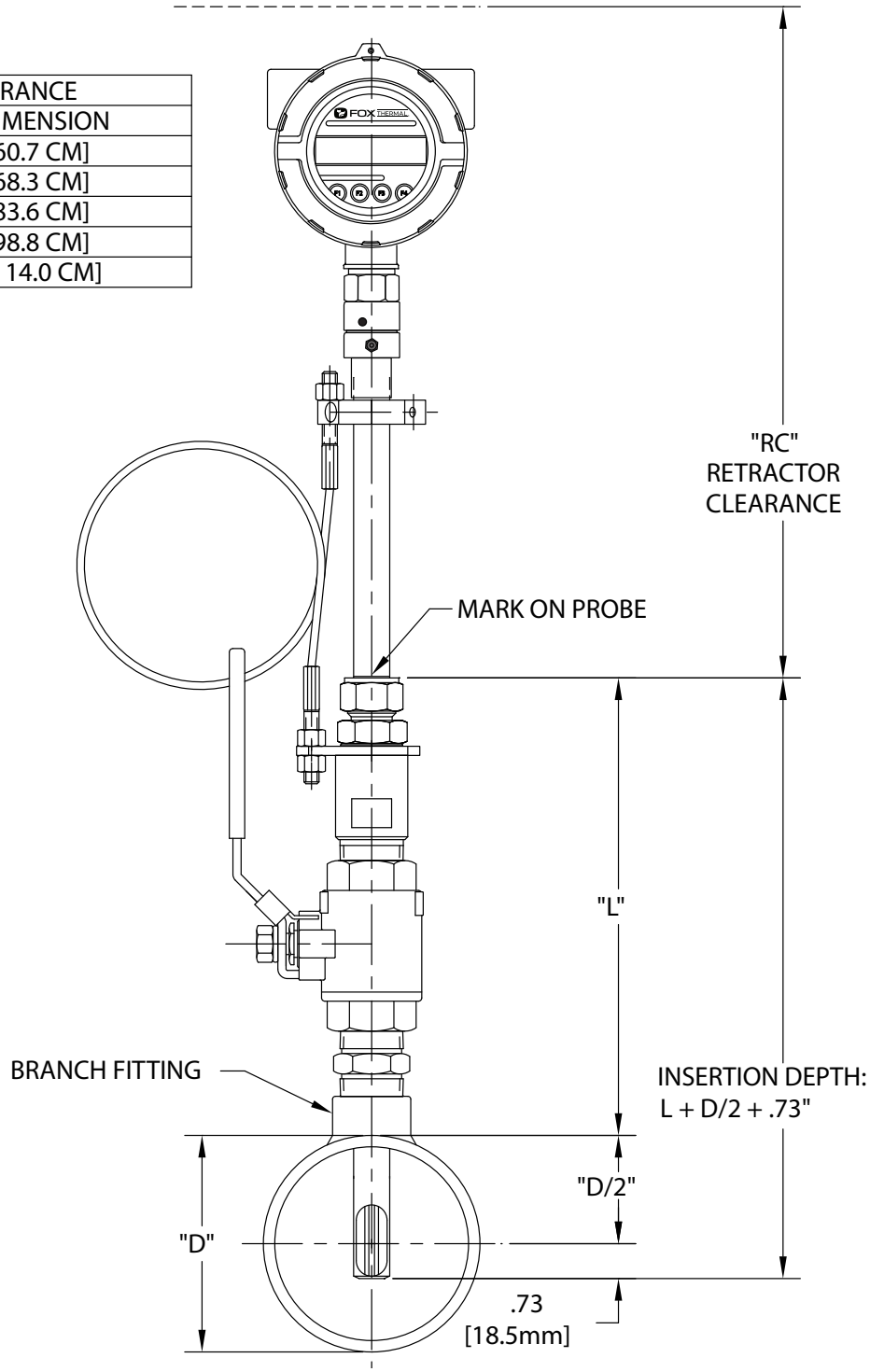

7. Insert probe back into the retractor to the depth mark and hand-tighten the compression fitting. Make sure collar spacer is in place on the probe.
8. Verify that flow direction indicator is in line with pipe and in the direction of flow.

Fig. 2.13: Installed Retractor

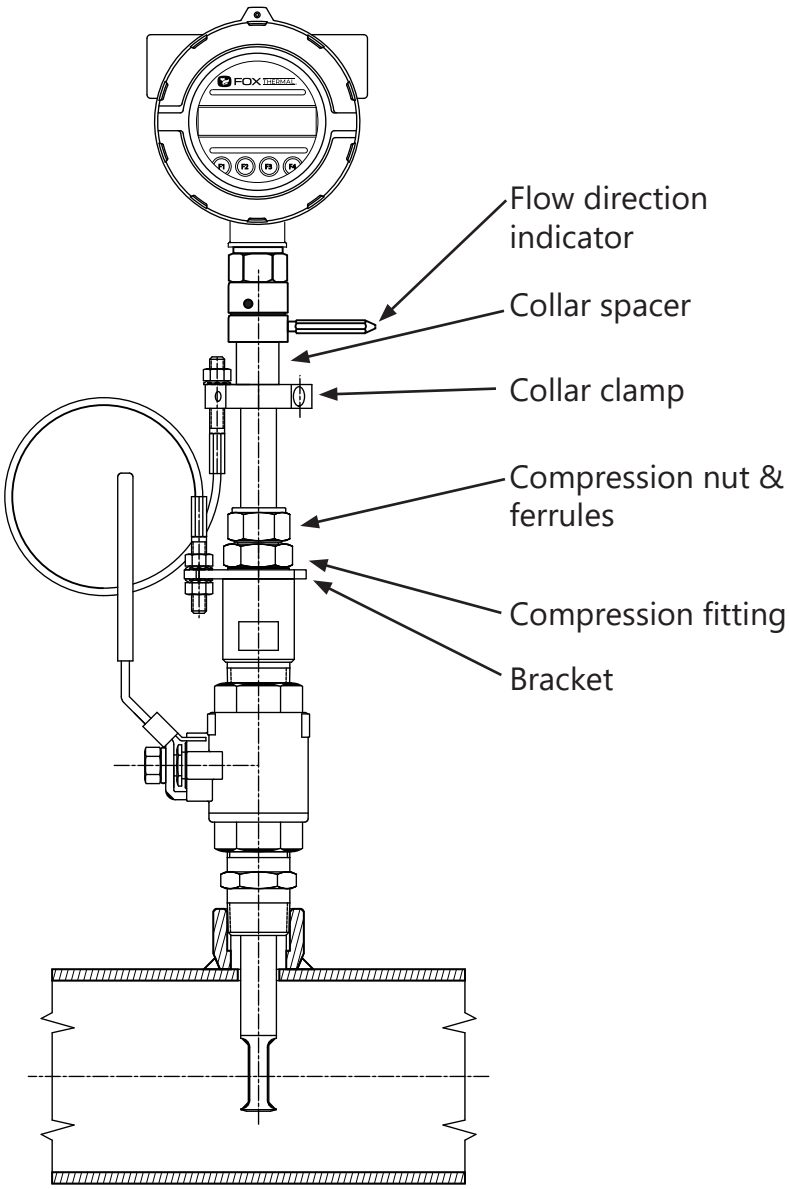

9. Fully tighten compression fitting (refer to the instructions on p. 25).
10. Install collar clamp back on probe just below the collar spacer. Install collar so that the cable mounting hole is in line with the mounting hole on the bracket.

NOTE! For instructions on how to properly remove and replace the meter from a retractor, please refer to "Instructions for Removing and Inserting the Meter from a Pressurized Pipe using the Retractor" on page 105.

Wiring Instructions

To wire the FT4X connect the power and signal wires to the terminal blocks according to the labeling and instructions on the following pages.

Fig. 3.1: FT4X Wiring Access

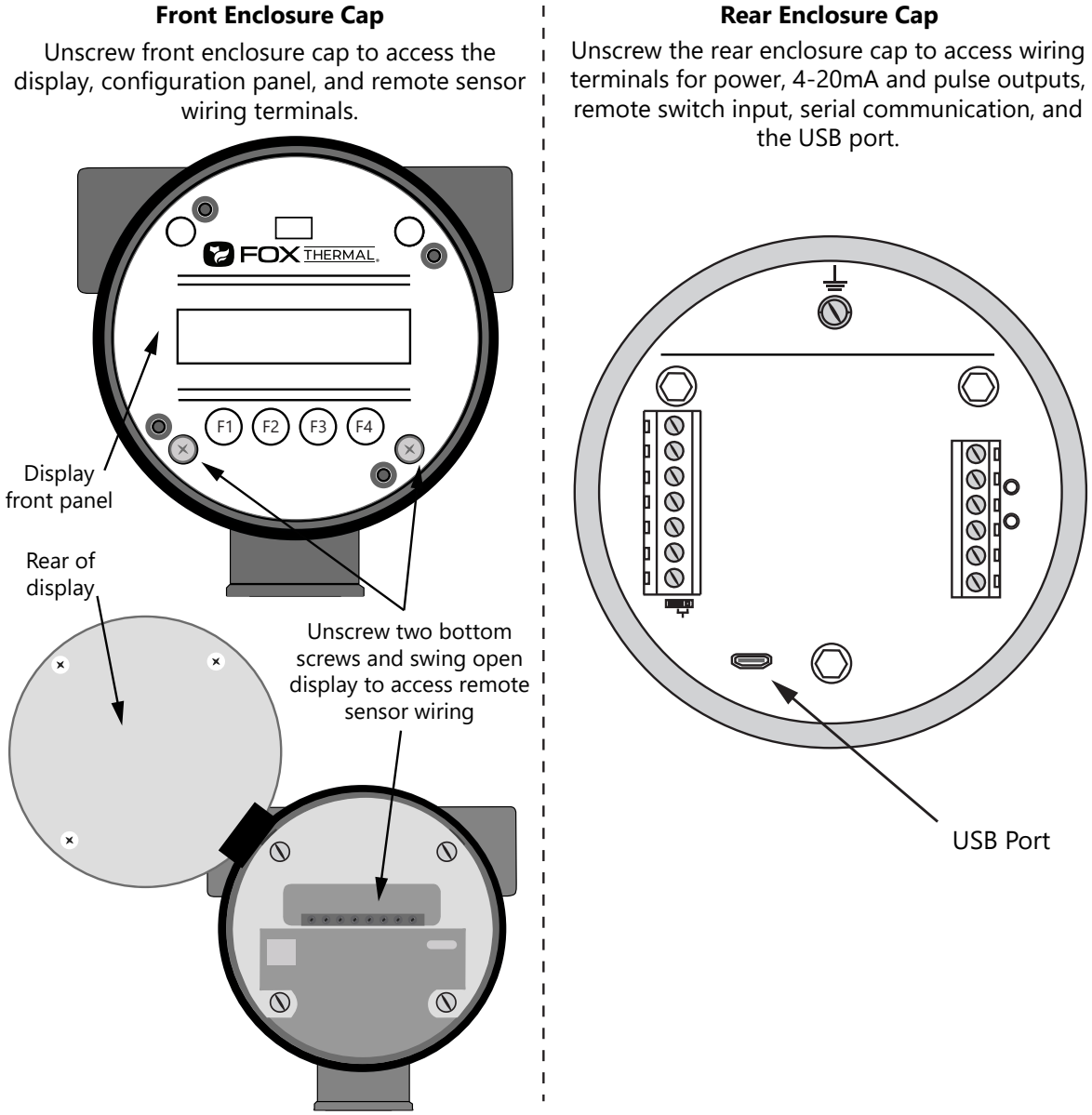

NOTE! Cut all wires as short as allowable for a minimum service loop. Obtain the correct length for the FT4X wires using one of these methods:

- Conduit not connected to meter: 6" of wires exposed from end of conduit
- Conduit connected to meter: extend wire beyond enclosure face (w/o cover) +2.5"

Wiring Precautions

WARNING!

- DO NOT OPEN THE ENCLOSURE WHEN ENERGIZED OR AN EXPLOSIVE ATMOSPHERE IS PRESENT.
- Connect earth ground to a chassis ground screw on the inside of FT4X enclosure.
- All plumbing and electrical installations of flow meters must be in compliance with local codes, the end user's best engineering practices, and manufacturer's recommendations.
- Do not install the FT4X enclosure near an igniter, igniter-controller or switching equipment to eliminate the possibility of noise interference.
- Do not install an external power supply in a cabinet containing an igniter controller or switching equipment.
- This flow meter contains components that can be damaged by static electricity. You must discharge yourself by touching a grounded steel pipe or other grounded metal prior to working inside this flow meter.
- Close any unused conduit openings with suitable certified plugs

Power Wiring
For AC or DC power wiring, use stranded copper wire. Twisted pair shielded cable is recommended for 12 to 24VDC power. Supply connection wiring must be rated for at least 90ºC.

Grounding
The enclosure must be properly grounded with a quality earth ground. 16 gauge, stranded wire is recommended. For US and Canada installation, the internal ground terminal on the enclosure must be used. Use of the external ground terminal is optional.

Signal Wiring
For signal wiring, the recommended wire gauge is 18 to 22 AWG. Always use twisted pair shielded cable. Cable shields should be connected to a good earth ground at one end only.

Modbus Serial Communication Wiring
A shielded 22 to 18 gauge three conductor cable is recommended for Modbus communication wiring. Two of the wires in the cable should be twisted pair and used for the Modbus transmit and receive signals. The third wire is for the Modbus common signal. The shield drain wire of the cable should be connected to chassis or earth ground at the Modbus modem. Belden number 3106A or a similar type of cable is recommended, depending on the environment or temperature requirements of the application.

Remote Sensor Wiring

NOTE! Remote wiring is only required when the Remote Electronics option is provided.

NOTE! Serial Numbers: If you have more than one meter, you must ensure that the serial numbers of the probe/remote enclosure, electronics enclosure, and flow body match one another. These items have been manufactured and calibrated to operate as a unit and cannot be mismatched.

For remote sensor wiring use Belden number 5306FE or similar type of cable, depending on environment or temperature requirements of the application. Make sure that the cable length does not exceed 100 feet and the wire resistance does not exceed one ohm. Connect the cable shield at the remote enclosure end.

Power Input Requirements: 12 to 24VDC
External DC power supply must provide 12 to 24VDC (10 to 30VDC full input power range) at 6 Watts minimum.
(With 12VDC power, the FT4X can use up to 500mA. With 24VDC power, the FT4X can use up to 250mA.)

A 20 Watt or greater power supply is recommended to ensure it can provide enough current under all temperature, ventilation, and power on conditions.

The enclosure must be properly grounded with a quality earth ground. Sixteen (16) gauge, stranded wire, is recommended for earth ground.

For US and Canada Zones installations, the internal ground terminal on the enclosure must be used. Use of the external ground terminal is optional.

Connect the power wiring as shown in the diagram below.

Fig. 3.2: Connections for 12 to 24VDC Supply

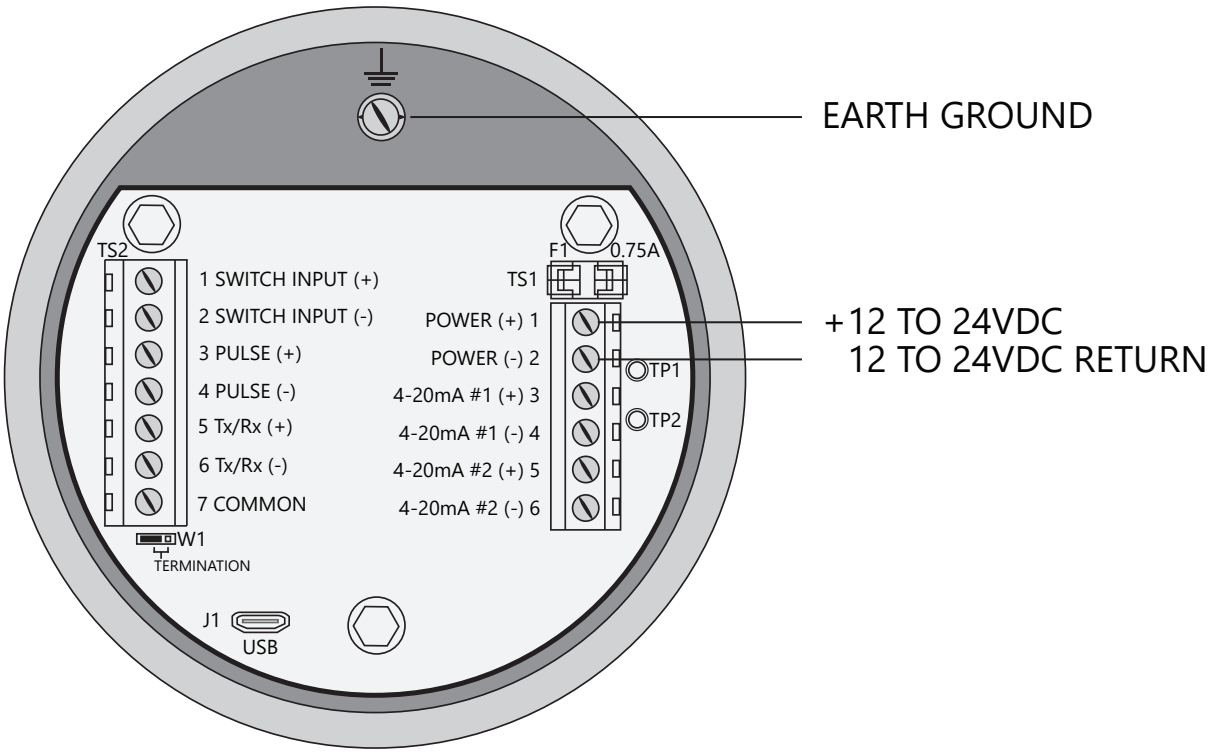

CAUTION!
- Supply connection wiring must be rated for at least 90°C.

Power Input Requirements: 100 to 240VAC
If the FT4X has the AC power supply option, the AC power must provide 100 to 240VAC at 7 Watts minimum.

Connect the power wiring to terminals TS1 pins 1 and 2 as shown in the diagram below.

The enclosure must be properly grounded with a quality earth ground. Sixteen (16) gauge, stranded wire, is recommended for earth ground.

For US and Canada installations, the internal ground terminal on the enclosure must be used. Use of the external ground terminal is optional.

Fig. 3.3: Connections for 100 to 240VAC Supply

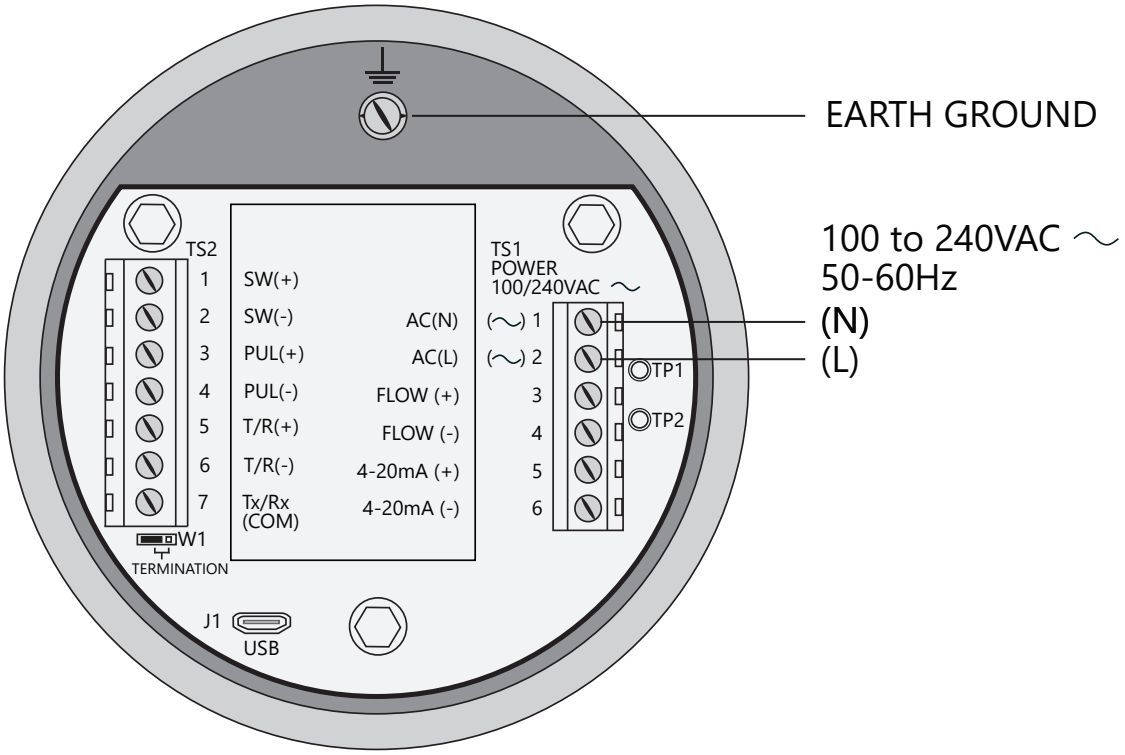

CAUTION!
- Supply connection wiring must be rated for at least 90°C.

4-20mA Output and HART Communication Wiring: Customer-Supplied Power Source (Recommended)

Bring the wiring in through either conduit hub. Connect the 4-20mA flow rate, 4-20mA temperature, and HART communication option wiring as shown in the diagram below.

Fig. 3.4: 4-20mA Output Wiring for Isolated Customer-Supplied Power Source

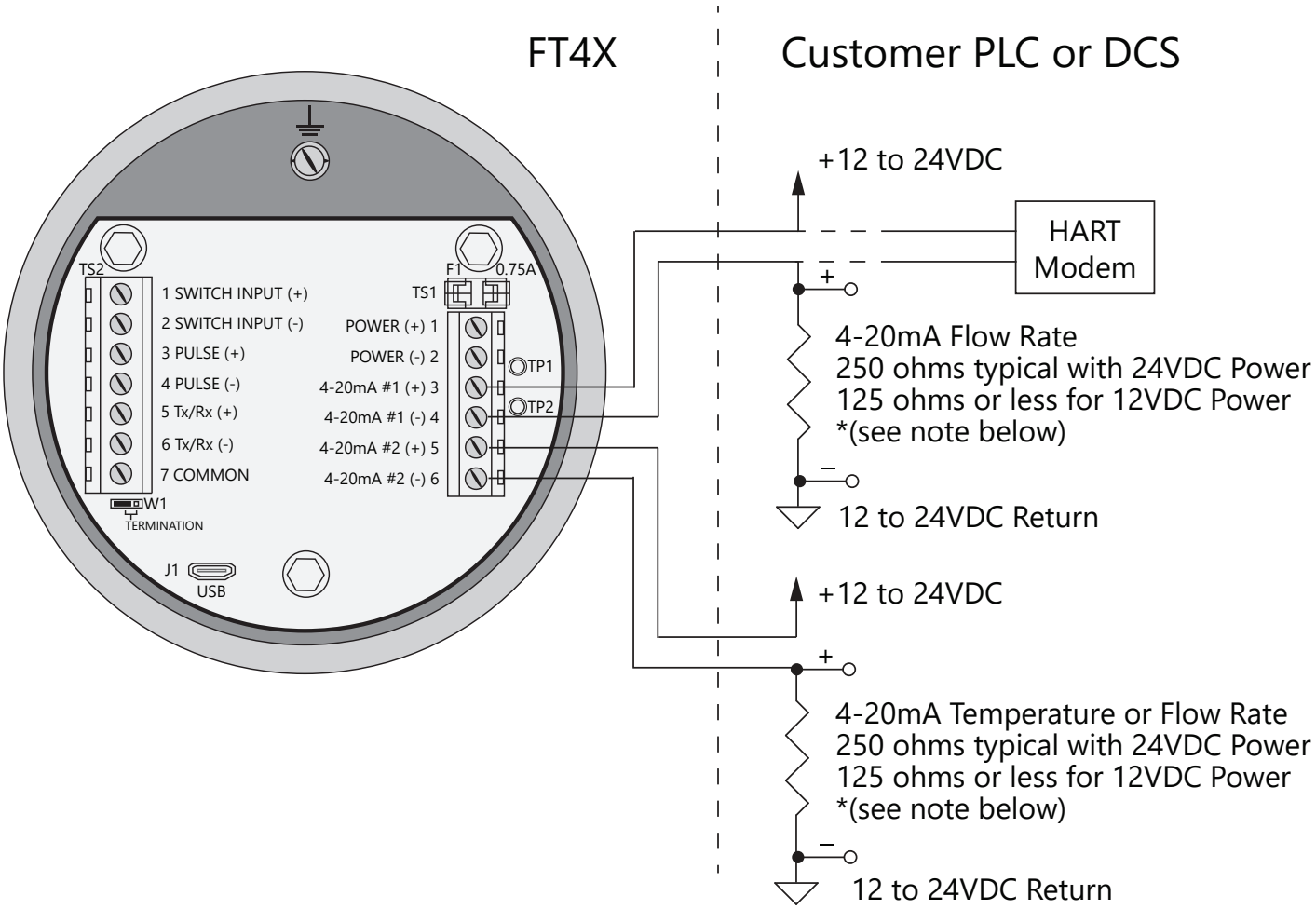

NOTE!

- When using a 12 volt power supply, the load resistor on the 4-20mA output must be 125 ohms or less to operate properly.
- When using 24 volt power, the load resistor is typically 250 ohms. A 250 ohm resistor in the 4-20mA circuit will result in a 1 to 5 volt signal to the PLC or DCS.
- When using a 24 volt power supply, the load resistor on the 4-20mA output must be 600 ohms or less.
- Some PLC and DCS equipment have built in load resistors, please refer to the technical manuals of such equipment.

4-20mA Output and HART Communication Wiring: Loop Power Provided by FT4X (12 to 24VDC power option only)

Bring the wiring in through either conduit hub. Connect the 4-20mA flow rate, 4-20mA temperature, and HART communication option wiring as shown in the diagram below.

Fig. 3.5: 4-20mA Output Wiring for Loop Power Provided by FT4X (DC Power Only)

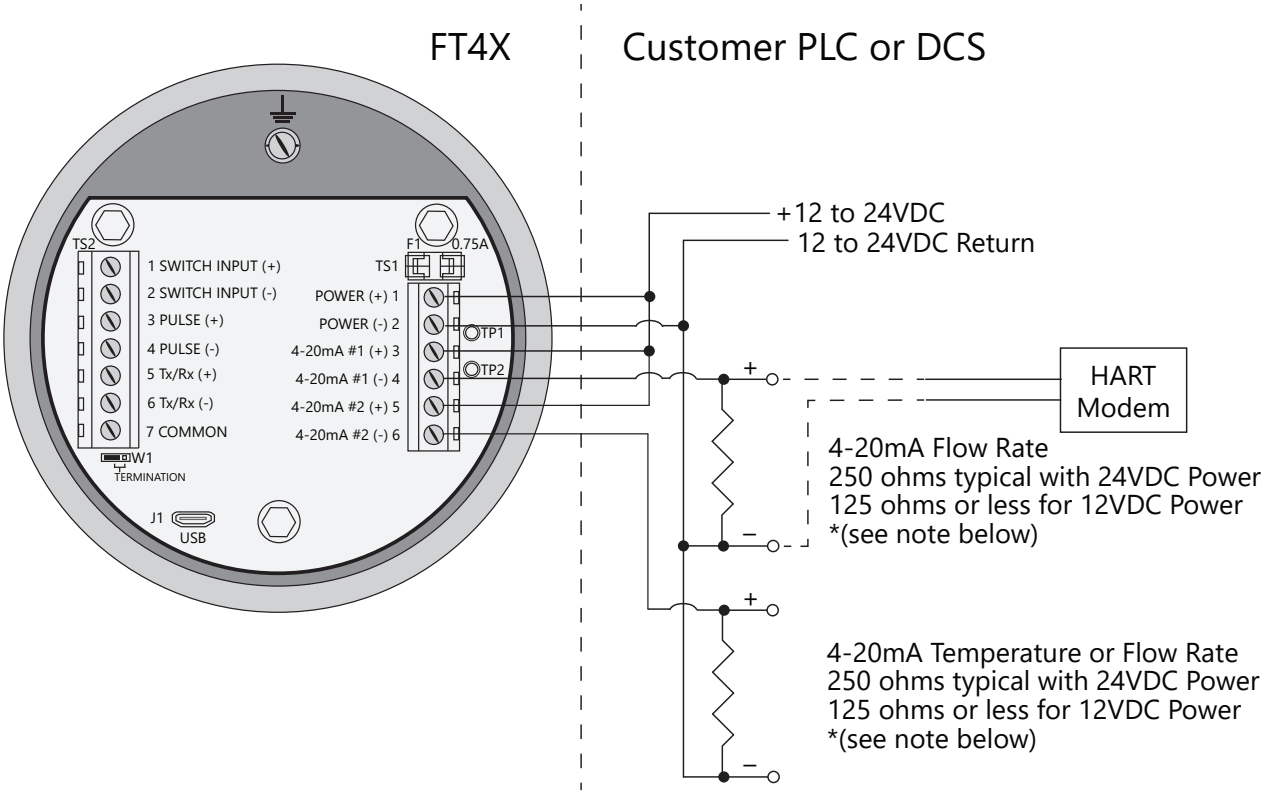

NOTE!

- When using a 12 volt power supply, the load resistor on the 4-20mA output must be 125 ohms or less to operate properly.
- When using 24 volt power, the load resistor is typically 250 ohms. A 250 ohm resistor in the 4-20mA circuit will result in a 1 to 5 volt signal to the PLC or DCS.
- When using a 24 volt power supply, the load resistor on the 4-20mA output must be 600 ohms or less.
- Some PLC and DCS equipment have built in load resistors, please refer to the technical manuals of such equipment.

Pulse/Alarm Output Wiring: Customer Supplied Power Source (Recommended)
Bring pulse/alarm wiring in through either conduit hub. Connect the pulse/alarm wiring as shown in the diagram below. The pulse/alarm output is an open collector circuit capable of sinking a maximum of 20mA of current. Pulse or alarm selection is programmed using the display or FT4X View™. Only one option, pulse or alarm, can be active at a time.

Fig. 3.6: Pulse/Alarm Output Isolated (Recommended)

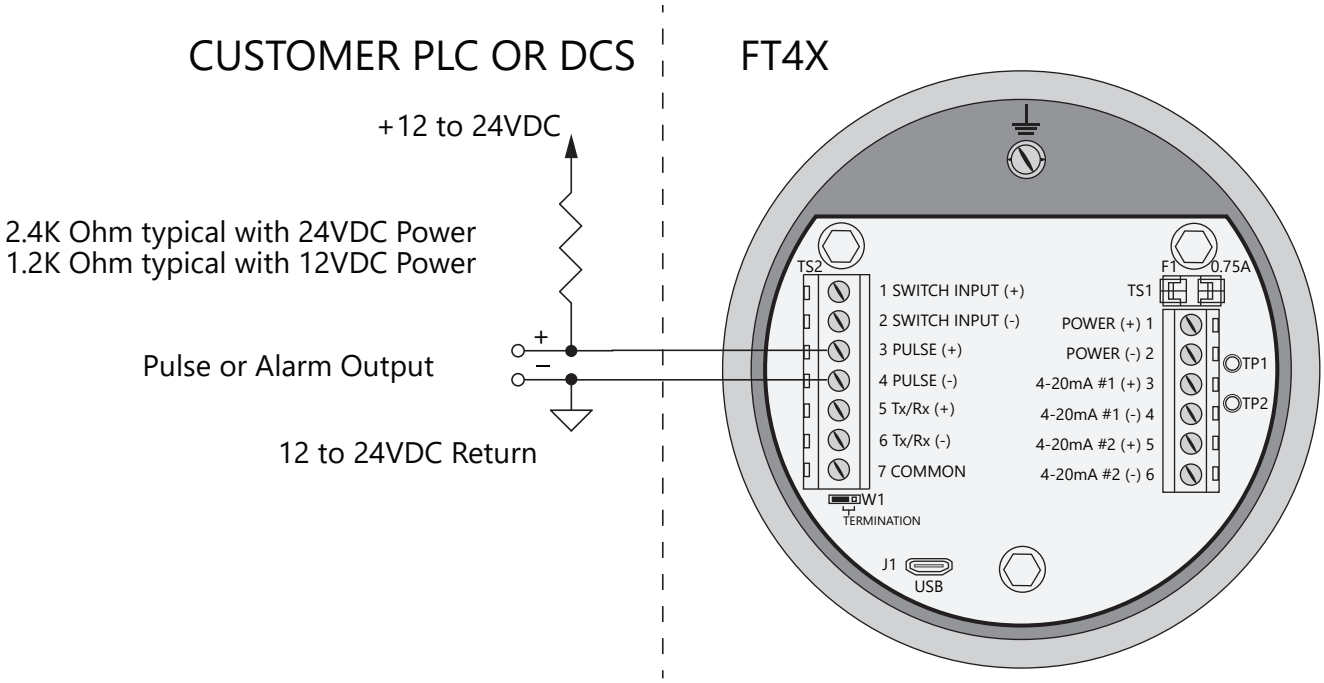

NOTE!

- The FT4X Pulse/Alarm output is typically used to drive digital circuitry or solid-state relays. The output of a solid state relay may, in turn, operate loads such as electromechanical relays or alarm indicators.
- The maximum load current of the Pulse/Alarm output is 20mA. Choose a load resistance that provides 10 to 20mA with the power supply operating voltage.
- When the output is configured for Alarm and an alarm is not active, the output will be on (0 volts output). When an alarm is active, the output will be off (12 to 24 volts output).

Pulse/Alarm Output Wiring: Power Provided by FT4X (12 to 24VDC power option only)
Bring pulse/alarm wiring in through either conduit hub. Connect the pulse/alarm wiring as shown in the diagram below. The pulse/alarm output is an open collector circuit capable of sinking a maximum of 20mA of current. Pulse or alarm selection is programmed using the display or FT4X View™. Only one option, pulse or alarm, can be active at a time.

Fig. 3.7: Pulse/Alarm Output Power Provided by FT4X (DC Power Only)

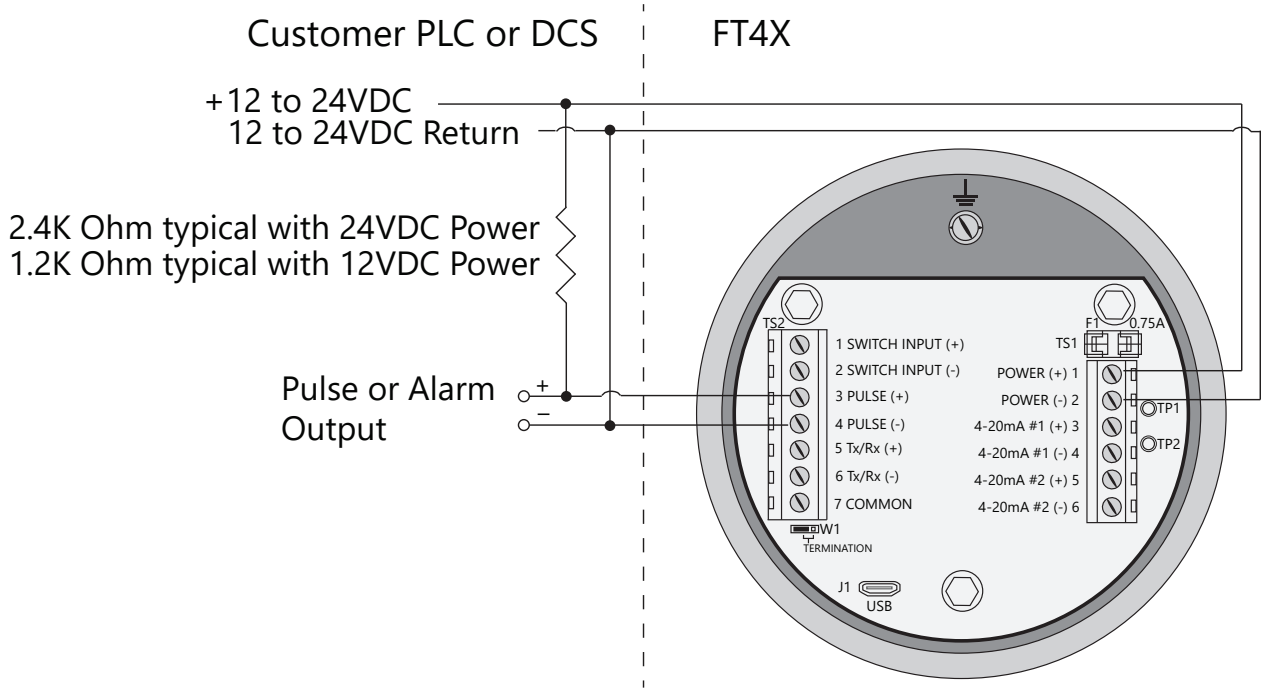

NOTE!

- The FT4X Pulse/Alarm output is typically used to drive digital circuitry or solid-state relays. The output of a solid state relay may, in turn, operate loads such as electromechanical relays or alarm indicators.
- The maximum load current of the Pulse/Alarm output is 20mA. Choose a load resistance that provides 10 to 20mA with the power supply operating voltage.
- When the output is configured for Alarm and an alarm is not active, the output will be on (0 volts output). When an alarm is active, the output will be off (12 to 24 volts output).

Switch Input Wiring

A remote switch can be used to reset the Totalizer and elapsed time, if enabled in the programming settings. Connect the switch input wiring as shown in the diagram below.

Fig. 3.8: Switch Input Wiring

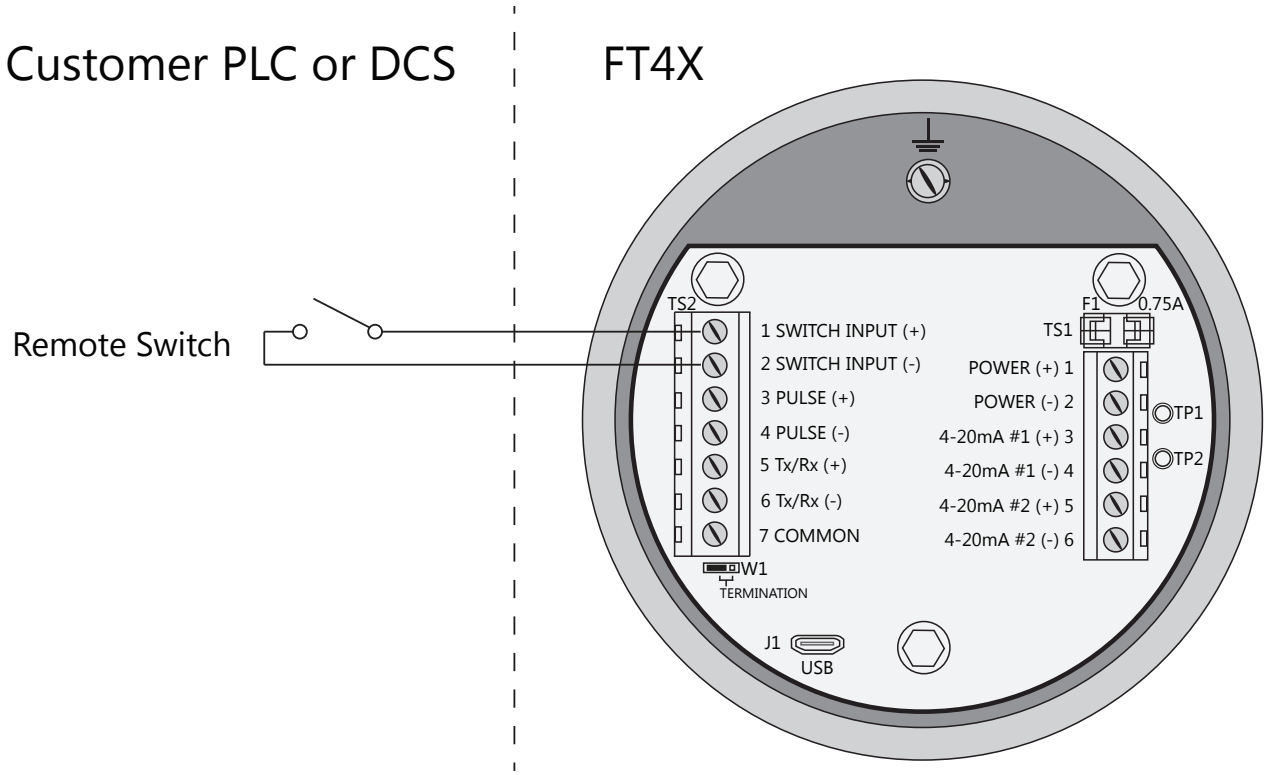

RS485 Wiring for Modbus RTU (RS485)
Wiring connections are made as shown in the diagram below for Modbus communication.

Termination Resistor
Connect a termination resistor across the receive/transmit signals of the last device on the communication line. To connect the 121 ohm termination resistor on the FT4X, set jumper W1 to the TERM position.

Disconnect the termination resistor on all other external RS485 devices. The termination resistor of the FT4X is disconnected by setting jumper W1 to the "open" position.

Fig. 3.9: RS485 Wiring

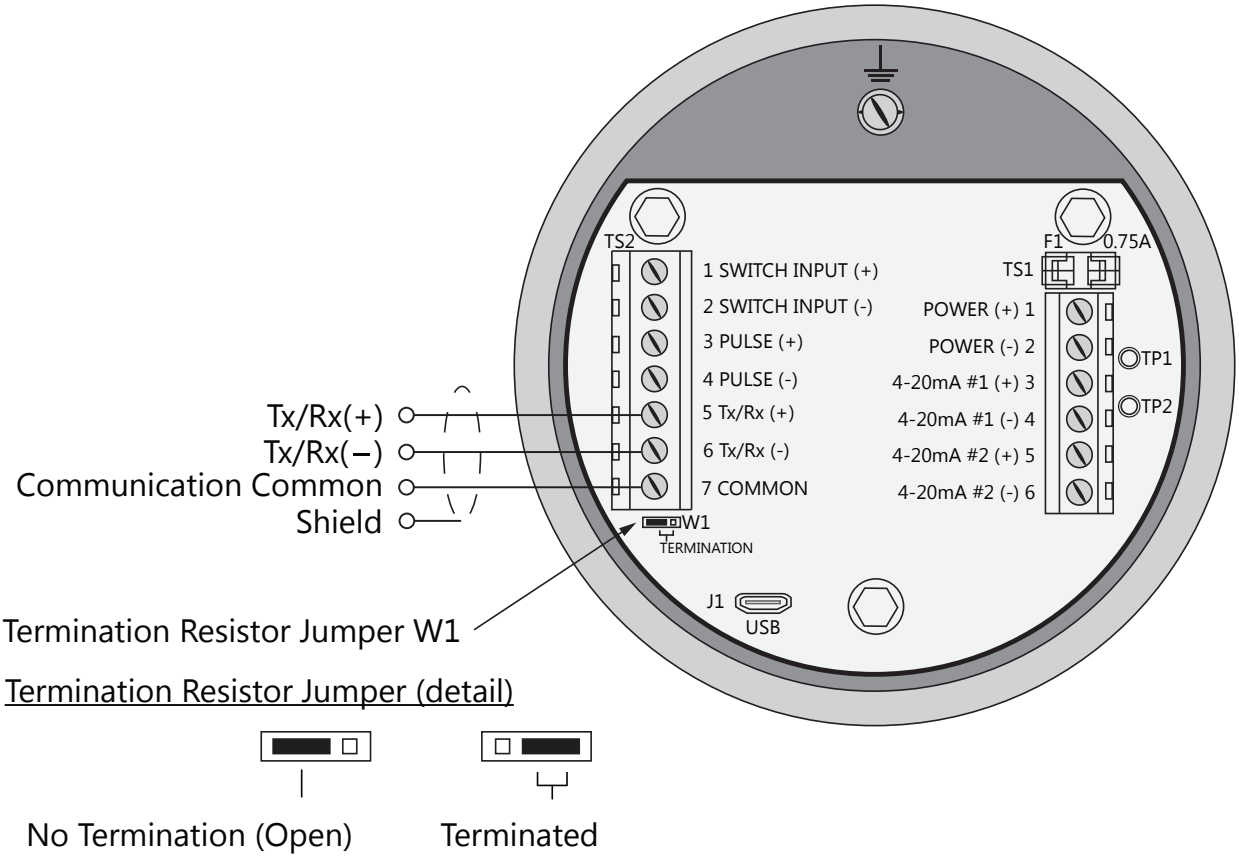

NOTE!
- W1 jumper will either be in the open or terminated position. It should be in the terminated position on the last meter in the series.

HART 4-20mA Output Wiring: Handheld Communicator
The 4-20mA current loop and HART modem connections are shown on p. 38 and p. 39.

A handheld HART communicator can be connected to test points TP1 (+) and TP2 (-) with clip leads or to the 4-20mA terminal block.

Fig. 3.10: HART 4-20mA Output Wiring, Handheld Communicator

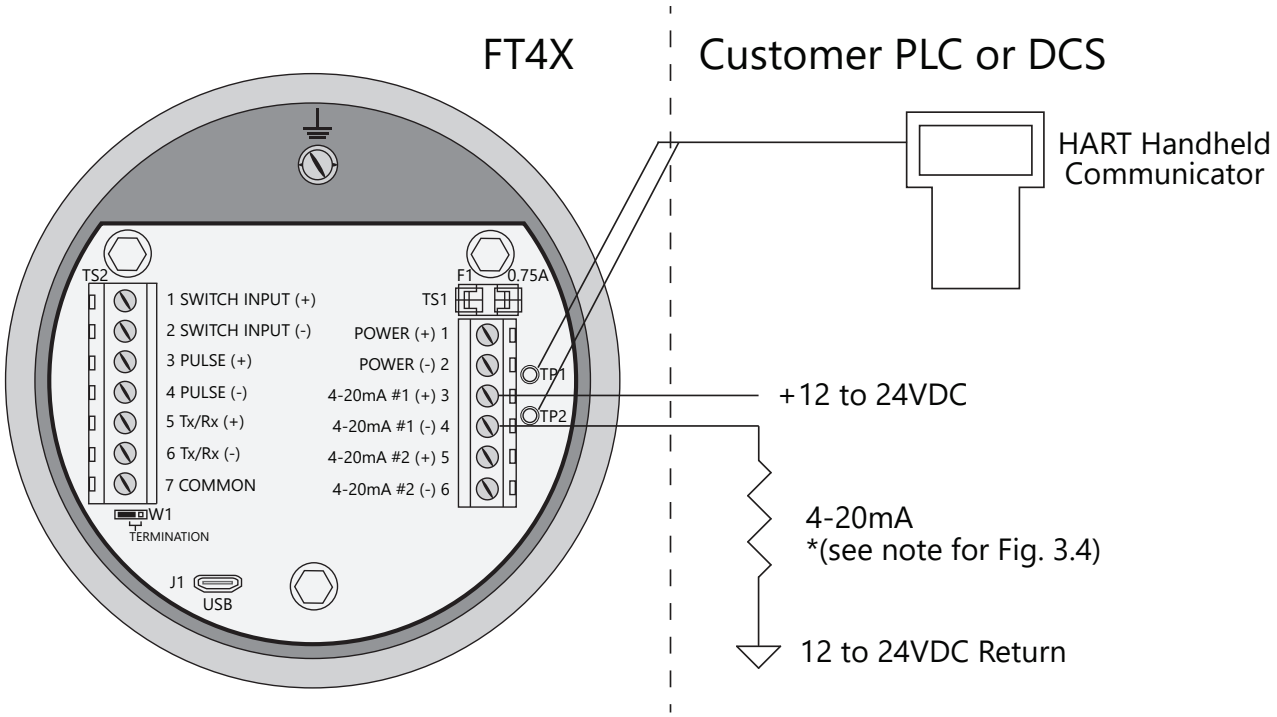

Remote Sensor Wiring
Remote sensor wiring is only necessary when the remote sensor option has been ordered.

Fig. 3.11: Remote Sensor Wiring

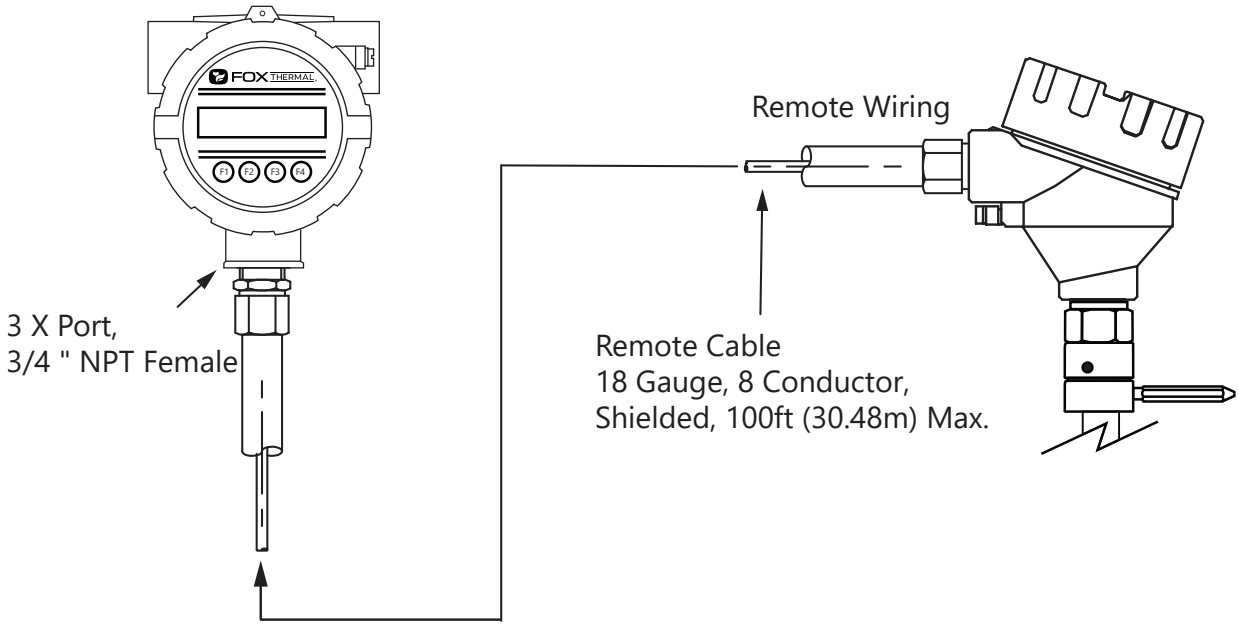

Use an extension cable to connect the FT4X remote sensor to the electronics enclosure.

Eight wire shielded cable required. The shielded cable should be run through a separate grounded steel conduit (no other cables or wires in the conduit). If you are using your own cable, make sure that the cable length does not exceed 100 feet and has a wire resistance that does not exceed one ohm (18 AWG recommended). The remote sensor wiring connections are shown on the following pages.

NOTE! Do not connect the cable shield at the electronics enclosure end. Connect the cable shield at the remote sensor terminal.

NOTE! The enclosures must be properly grounded with a quality earth ground. 16 gauge, stranded wire is recommended.

NOTE! *Serial numbers:* If you have more than one meter, you must ensure that the serial numbers of the probe/remote enclosure, electronics enclosure, and flow body match one another. These items have been manufactured and calibrated to operate as a unit and cannot be mismatched.

Fig. 3.12: Remote Sensor Wiring

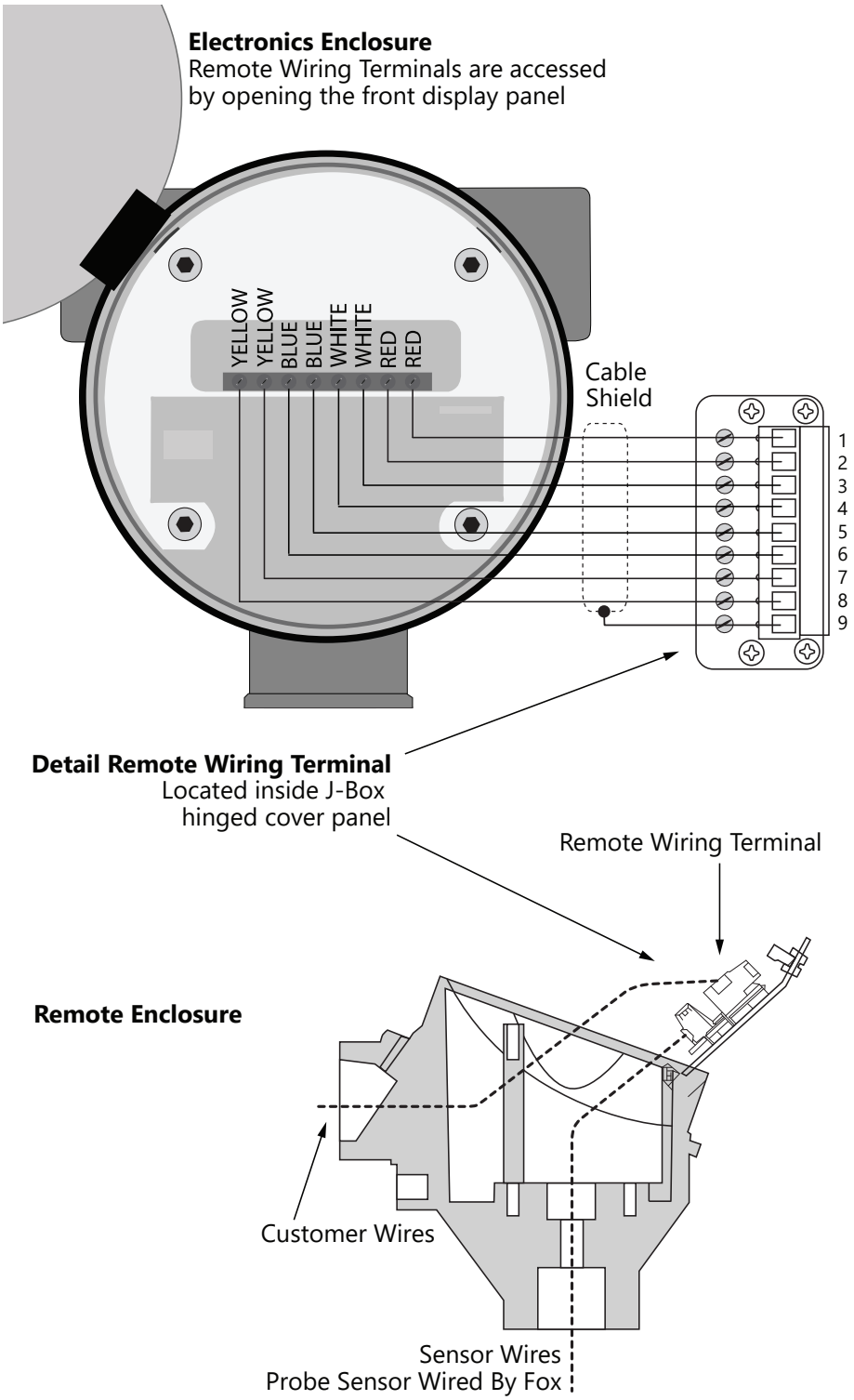

Table 3.1: Remote Sensor Cable Wiring

Electronics Enclosure Terminals	Extension Cable Wire Color	Remote Enclosure Terminal Numbers	Sensor Wire Color
Red	Red	1	Red
Red	Brown	2	Red
White	White	3	White
White	Black	4	White
Blue	Blue	5	Blue
Blue	Green	6	Blue
Yellow	Yellow	7	Yellow
Yellow	Orange	8	Yellow
No Connection	Shield	9	

NOTE! Wire colors listed here represent the wire colors of cables supplied by Fox Thermal. Colors may vary if customer is supplying their own cable.

Start Up Sequence
The program automatically enters the Run/Measure mode after power up. The screen will show the firmware version of the FT4X during power up.

USB Interface
The USB interface is a standard feature which allows communication with a PC to monitor readings and configure settings. FT4X View™, is a free application program from Fox Thermal that connects to the USB interface and allows data monitoring, configuration setting, data logging to Excel, and an option to save and recall FT4X configuration data.

Software Interface
Fox Thermal offers two powerful software options to enhance your flow meter experience: FT4X View™ and ModbusView™. Both applications provide users with efficient access to meter data and configuration settings, allowing for seamless integration with your laptop, PC, or control station.

FT4X Display and Configuration Panel
The FT4X has a 2 line x 16 character display with 4 mechanical buttons. The meter can be programmed by using the display and configuration panel. The configuration panel can be accessed by removing the FT4X cap. Be sure to replace the cap after you are done configuring the FT4X.

Fig. 4.1: FT4X Display and Configuration Panel

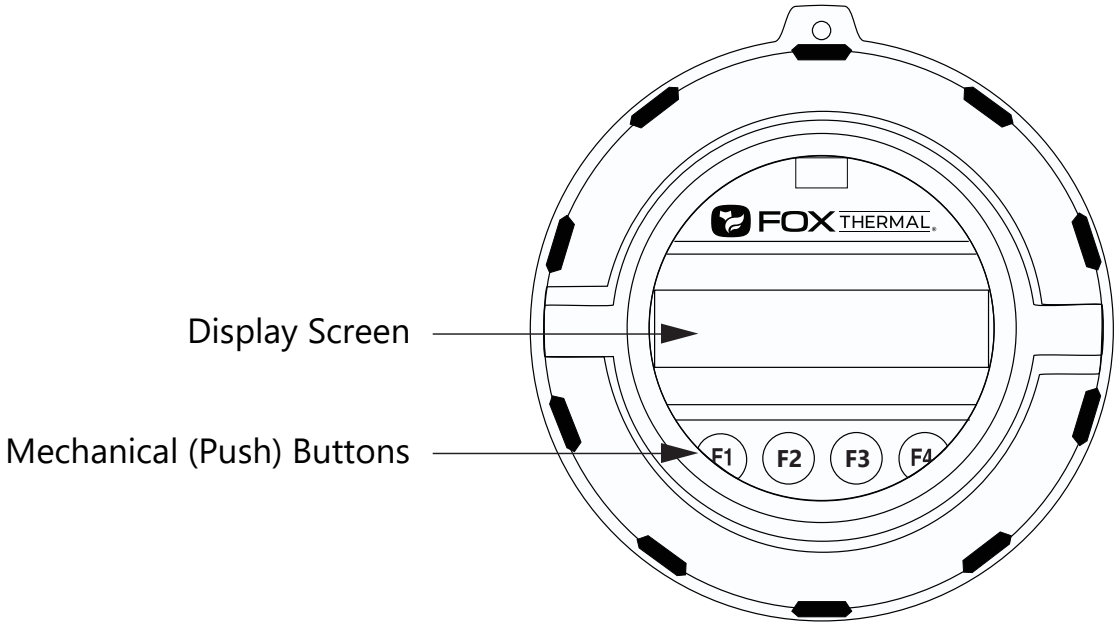

Measurement Mode Display Screens

In the measurement mode, there are four different display screens (display 1, 2, 3 and a prompt screen to enter the programming mode). Two display screens are user programmable (refer to Display Setup p. 56). Scrolling through the display is accomplished by pressing the **F1** or **F2** key to view the next or previous screen.

Pressing the **F1** and **F2** keys at the same time enters the Log Menu and Engineering Menu screens (refer to p. 15).

Pressing the **F3** and **F4** keys at the same time brings up the Reset Total screen prompt.

Fig. 4.2: FT4X Measurement Mode Display Screen Navigation

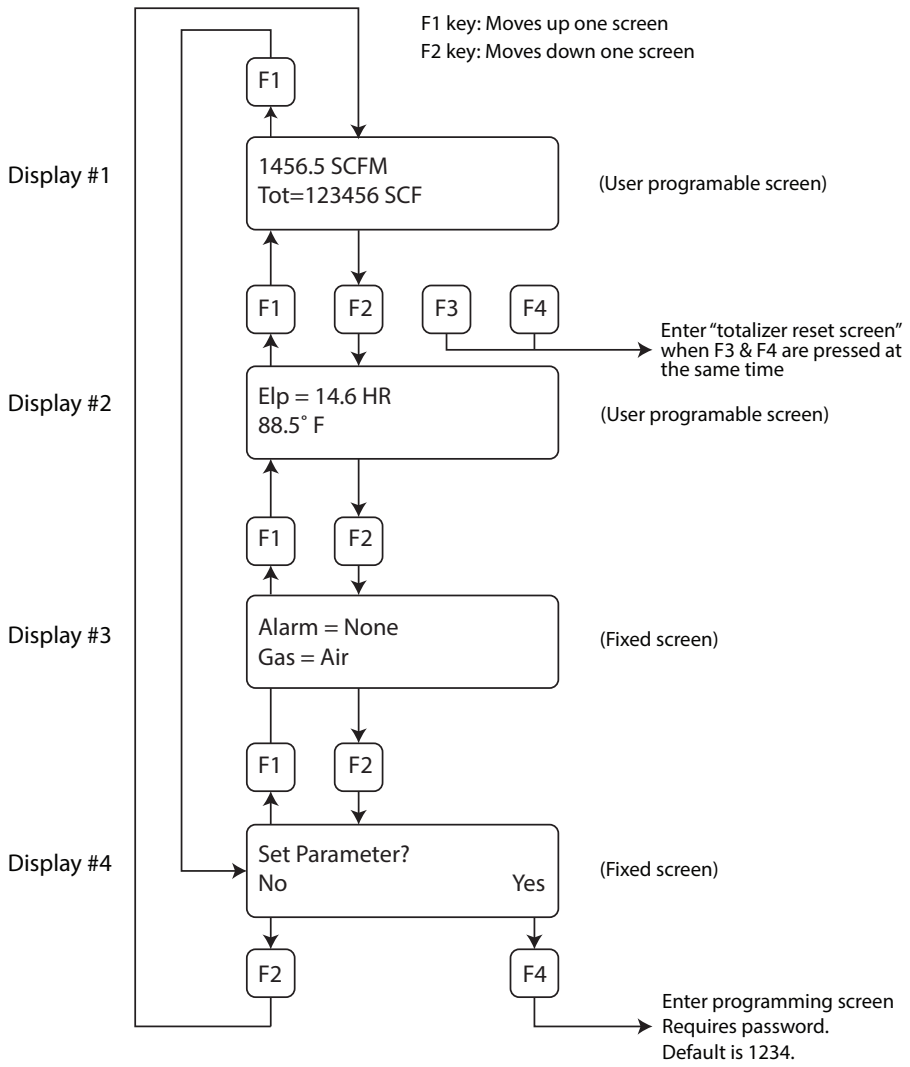

Programming: Data Entry using the Display and Configuration Panel
There are 2 basic types of menu entries: one for changing value or string and one for selecting from a selection list.

To Change a Value or String :

```
VALUE = 0.91234
CHG                    OK
```

F1 F2 F3 F4

Press **CHG (F1)** key to change the value, **OK (F4)** to accept the value.

```
VALUE = 0.91234
UP     DN     NXT    OK
```

F1 F2 F3 F4

Press the **UP (F1) or DN (F2)** key to select a new digit or character, the cursor points to the selected digit. Press **NXT (F3)** to select the next digit and **OK (F4)** to accept the entry.

To Select from a List:

```
FLO UNT = SCFM
NXT                    OK
```

F1 F2 F3 F4

Press **NXT (F1)** key repeatedly until the correct selection is made and **OK (F4)** key to accept the entry.

Entering the Programming Mode
To enter the programming mode and access the Main Menu, press the **F1** or **F2** key in the normal running mode until the following screen is shown:

```
  SET PARAMETERS ?
No                     Yes
```

F1 F2 F3 F4

Press **YES (F4)** and the following screen will prompt user to enter password:

```
PASWD:_
UP     DN     NXT    OK
```

F1 F2 F3 F4

Enter the correct password, then follow the instructions for changing a value as specified on page p. 50. The default Level 1 password is “1234”.

If the wrong password is entered, the message “Wrong Password” will display and then return to the programming entry screen.

Main Menu
If the password is accepted, the Main Menu screen will be shown:

```
        MAIN MENU
I/O     FLO     DSP     EXIT
```

F1 F2 F3 F4

This is the Main Menu screen for the programming mode. To exit the programming mode, press **EXIT (F4)** repeatedly until “Normal Mode” is briefly displayed.

Analog 4-20mA Outputs
The following menu allows the scaling of the analog 4-20mA output. From the Main Menu, press **I/O (F1)** to move to the 4-20mA output selection. In this screen press **420 (F3)** (screen appearance may vary according to options).

```
    SET         I/O
COM     PUL     420     EXIT
```

F1 F2 F3 F4

The 4-20mA output is programmable for flow or temperature:

```
mA=Flow
NXT                     OK
```

F1 F2 F3 F4

Selections for the 4-20mA output are:
Flow
Temp

Select **NXT (F1)** to select Flow or Temperature and then press **OK (F4)**.

```
20 mA =   3500 SCFM
CHG                     OK
```

F1 F2 F3 F4

Enter the value for the 20mA and press **OK (F4)** key to accept the setting. Then the following screen will display:

```
4 mA =   0  SCFM
CHG                    OK
```

F1 F2 F3 F4

Enter the value for the 4mA and press **OK (F4).**

NOTE! When the flow rate exceeds the programmed value for the 20mA set point, the analog output will stay at 20mA and an alarm code will be generated.

NOTE! 4mA is normally set to 0.

After setting the 4mA output value, choose the mA fault value:

```
mA Fault = Not use
NXT                    OK
```

F1 F2 F3 F4

This menu allows the user to select an alarm fault level on the 4-20mA output. The alarm is activated when a serious issue is detected preventing the calculation of the correct flow rate. The 3.6mA and 21mA alarm outputs are related to the NAMUR NE 43 alarm feature.

The options are:
- mA Fault=3.6 mA (Force the 4-20mA signal to 3.6mA on alarm)
- mA Fault=21 mA (Force the 4-20mA signal to 21mA on alarm)
- mA Fault=Not use (4-20mA signal alarm fault not used)

The following events will set the output to 3.6mA or 21mA if the alarm level is selected:
- Sensor resistance above high limit
- Sensor measurement circuit shutdown

Fig. 4.3: Range of 4-20mA Output and NAMUR Alarm

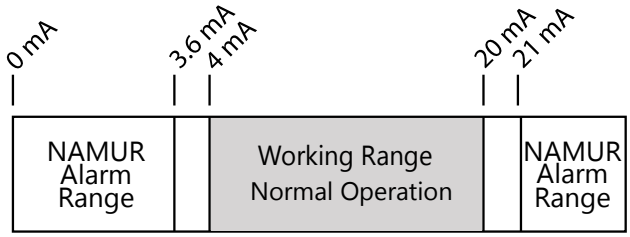

Press **(F4)** repeatedly until “Normal Mode” is seen briefly to exit the programming mode.

Pulse/alarm Output
The Pulse/alarm feature can be accessed from the Main Menu, press **I/O (F1).**

```
      SET        I/O
OUT    INP            EXIT
```

F1 F2 F3 F4

Press **OUT (F1)** to select the pulse output. The following screen will show:

```
OUT = Pulse
NXT                  OK
```

F1 F2 F3 F4

Press **NEXT (F1)** to cycle through output options until you have the selection for "OUT=Pulse" and press **OK (F4).**

The pulse output can be configured in one of three ways:

1. Specifying how many pulses per unit, P/U (i.e., 10 pulses per SCF)
2. Specifying how many flow units total per pulse, U/P (i.e., 0.1 SCF per pulse)
3. Specifying a maximum frequency to a defined maximum value of flow rate

All of these approaches are equivalent.

```
PULSE OUTPUT
P/U     U/P     FEQ    EXIT
```

F1 F2 F3 F4

Use **P/U (F1)** to enter pulse per unit, **U/P (F2)** for unit per pulse or **FEQ (F3)** to enter the flow and maximum frequency to scale the pulse/alarm output.

NOTE! When data is entered with any of the three described methods, the other values will be re-calculated according to the settings.

Entering data in Pulse per Unit:
From the Pulse/alarm Output Menu above, press **P/U (F1)** and the following screen will show:

```
PLS/UNT = 2
CHG                  OK
```

F1 F2 F3 F4

Press **CHG (F1)** to change the setting and then **OK (F4)** to accept entry.

The value entered is in pulse per selected flow unit total (i.e., 2 pulses per SCF).

Entering data in Unit per Pulse:
From the Pulse/alarm Output Menu, press **U/P (F2)** and the following screen will show:

```
UNT/PLS = 0.5
CHG                    OK
```

F1 F2 F3 F4

Press **CHG (F1)** to change the setting and then **OK (F4)** to accept entry.
The value entered is in unit per pulse (i.e. 0.5 flow unit total per pulse)

Entering data with flow and maximum frequency:
From the Pulse/alarm Output Menu, press **FEQ (F3)** and the following screen will show:

```
MaxFreq=100  Hz
CHG                    OK
```

F1 F2 F3 F4

Enter the maximum pulse rate (frequency) and press **OK (F4).**

CAUTION! Maximum pulse rate (frequency) cannot exceed 100 Hz.

The next screen will show:

```
MaxFlo=5000 SCFM
CHG                    OK
```

F1 F2 F3 F4

NOTE! If the flow rate exceeds the maximum pulse rate (frequency), the output will stay at 100 Hz and the FT4X will issue an alarm code.

Alarm Output
To access the Pulse/alarm feature, press **I/O (F1)** key from the Main Menu screen. The screen will show:

```
      SET        I/O
OUT   INP              EXIT
```

F1 F2 F3 F4

Then press **OUT (F1)** and the screen may show:

```
OUT = HiFloAlm
NXT                    OK
```

F1 F2 F3 F4

Then press **NXT (F1)** to select the correct alarm and press **OK (F4).**

Selections are:

- Not used
- Pulse
- HiFloAlm = High Flow Alarm
- LoFloAlm = Low Flow Alarm
- HiTempAlm = High Temperature Alarm
- LoTempAlm = Low Temperature Alarm
- System Alarm

When the output is set to Alarm and there is no alarm condition, the output will be on (0 volts). When an alarm is active, the output is turned off (12 to 24 volts).

```
HiFloAlm=500 SCFM
CHG                    OK
```

F1 F2 F3 F4

Enter the value for the limit by pressing **CHG (F1)** and then **OK (F4).** A value of 0 disables the alarm.

NOTE! There is only one output to operate as a pulse output or an alarm output. Both cannot operate at the same time.

For Switch Input Settings:

From the Main Menu, press **I/O (F1)** and then **I/O (F1)** and then **INP (F2)** key to select input. The following menu will display:

```
      INP=Not Used
NXT                    OK
```

F1 F2 F3 F4

Press **NXT (F1)** until the correct selection is shown and then press **OK (F4)** to accept the setting.

Selections are:

- Not used
- Tot Reset = Reset the totalizer

Press **EXIT (F4)** repeatedly until you exit programming mode.

Serial Communication Settings
If a communication feature was purchased, the Serial communication settings can be programmed by pressing **I/O (F1)** key from the Main Menu. The screen will show:

```
        I/O MENU
I/O     COM    420     EXIT
```

F1 F2 F3 F4

Press **COM (F2)** to select Serial communication.
The screen may show:

```
Comm=Modbus
NXT                     OK
```

F1 F2 F3 F4

Options for serial communication are:
- None
- Modbus
- HART

NOTE! Any selection other than "None" requires the communication option for the selected communication type. If enabling a communication option, see the Communications Protocols section of this manual.

Display Setup
There are four display screens that you can cycle through in normal operating mode (see Figure 4.2 on p. 49). Two of the four display screens are fixed and cannot be changed (Display 3 and Display 4). The other two screens are programmable to show the information that you prefer and is discussed in this section.

Display #1

```
DSP1L1
DSP1L2
```

F1 F2 F3 F4

Display #2

```
DSP2L1
DSP2L2
```

F1 F2 F3 F4

Selections are:
- DSP1L1 = Display 1, Line 1
- DSP1L2 = Display 1, Line 2
- DSP2L1 = Display 2, Line 1
- DSP2L2 = Display 2, Line 2

To Program Display Screens #1 & 2:
From the Main Menu press **DSP (F3)** to select the display menu:

```
DISP/TIME/PSW
DSP     LOG     PSW     EXIT
```

F1 F2 F3 F4

Press **DSP (F1)** key. The display will show:

```
DSP1L1 = Flo rate
NXT                     OK
```

F1 F2 F3 F4

These are the selections for the Display 1, Line 1.

Selections are:

- Flo rate = Flow rate
- Total = Total mass or volume
- Elps = Elapsed time
- Temp = Temperature
- Alarm = Error codes

When the selection is correct, press **OK (F4)** to accept. The display will then go through the same process for all 4 lines of the 2 programmable displays (DSP1L1, DSP1L2, DSP2L1 and DSP2L2). After the last line of Display 2 is accepted, the display will show the following menu:

```
ALTERNATE = Off
NXT                     OK
```

F1 F2 F3 F4

This menu allows you to alternate between menu display 1 and 2 every few seconds.

Selections are: On or Off

Press **OK (F4)** to accept selection. Press **EXIT (F4)** repeatedly until “Normal Mode” is seen briefly to exit the programming mode.

Reviewing and Enabling Date/Time for 24 Hour Logs and Contract Time:
The 24-Hour Log should be enabled and set to the local date/time at the commission site to make full use of the Logs feature on the FT4X. The Contract Time setting allows the user to specify the start time for recording daily flow totals.

```
DISP/TIME/PSW
DSP     LOG     PSW     EXIT
```

F1 F2 F3 F4

Press **LOG (F2)** key to turn on or off the 24 Hour Log and perform a Date/Time review.

```
        24 Hour log=On
NXT                     OK
```

F1 F2 F3 F4

Selections are: On or Off

To review the date and time settings, press **NXT (F4)**.

```
     Date/Time Review
                        NXT
```

F1 F2 F3 F4

Date/time settings will be displayed as a 24-hour clock (military time) format: HH:MM:SS.

```
MM/DD/YY        HH:MM:SS
CHG                   NXT
```

F1 F2 F3 F4

If the date and time are correct, the 24 Hour Log will be turned on or off by pressing **NXT (F1)**. If the date and time are incorrect, the values can be changed and set by choosing **CHG (F1)** and following instructions in the next section.

Programming the Date/Time for 24 Hour Logs and Contract Time:
The following screens will cycle through Year, Month, Day, Hour, Minute, and Seconds. Press **CHG (F1)** to set the year value using the last two numerals (2020 = 20, 2021 = 21):

```
Year Set = YY
CHG                     OK
```

F1 F2 F3 F4

Press **OK (F4)** to set the value for year.
Press **CHG (F1)** to set the month value 1-12 (January = 1, October = 10):

```
Month Set = MM
CHG                     OK
```

F1 F2 F3 F4

Press **OK (F4)** to set the month value. Press **CHG (F1)** to set the day value 1-31:

```
Day Set = DD
CHG                 OK
```

F1 F2 F3 F4

Press **OK (F4)** to set the day value. Next press **CHG (F1)** to set set the hour value 00-23:

```
Hour Set = HH
CHG                 OK
```

F1 F2 F3 F4

Press **OK (F4)** to set the hour value. Next press **CHG (F1)** to set the minute value 00-59:

```
Min Set = MM
CHG                 OK
```

F1 F2 F3 F4

Press **OK (F4)** to set the minute value. Next press **CHG (F1)** to set the second value 00-59:

```
Sec Set = SS
CHG                 OK
```

F1 F2 F3 F4

Press **OK (F4)** to set the second value.

To set all final values, choose **YES (F1)** or start over by choosing **NO (F4)**:

```
      Set Date/Time?
YES                 NO
```

F1 F2 F3 F4

The screen will show:

```
MM/DD/YY       HH:MM:SS
CHG                 OK
```

F1 F2 F3 F4

Press **OK (F4)** to set the 24-Hour Clock as displayed and move to the Contract Time menu.

NOTE! Contract Time will only be set if the 24 Hour Log has been selected to be "On".

The following screens will cycle through hour and minute to set the Contract Time in the 24-Hour Clock format: HH:MM.

```
Contr time = HH:MM
CHG                OK
```

F1 F2 F3 F4

To accept the listed Contract Time, choose **OK (F4)**. To change and set the value of the Contract Time, press **CHG (F1)**. First set the hour value 00-23:

```
Contr.Hour = HH
CHG                OK
```

F1 F2 F3 F4

Press **OK (F4)** to set the hour value. Next press **CHG (F1)** to set the minute value 00-59:

```
Contr.Min = MM
CHG                OK
```

F1 F2 F3 F4

Press **OK (F4)** to set the minute value. To set the final value, choose **YES (F1)** or **NO (F4)**:

```
Set Contr Time?
YES                NO
```

F1 F2 F3 F4

The Contract Time will be displayed.

```
Contr time = HH:MM
CHG                OK
```

F1 F2 F3 F4

Press **OK (F4)** to exit to the Display Menu.

Password

There are two user level passwords, only **Level 1** is programmable and gives access to all the normal settings. The second password is used to allow access to calibration settings.

Default **Level 1** password is “1234”, and **Level 2** password is “9111”. The **Level 1** programmable password can be disabled by setting it to “0”.

To Program the Password:
From the Main Menu press **DSP (F3)** to select the display menu.

```
DISP/TIME/PSW
DSP     LOG     PSW     EXIT
```

F1 F2 F3 F4

Press **PSW (F3)** key to select password.

```
PASSWD = 1234
CHG                     OK
```

F1 F2 F3 F4

This screen displays the current **Level 1** password.
Press **CHG (F1)** key to change the password and enter new value.

Press **OK (F4)** to accept new data and exit programming by pressing **EXIT (F4)** key repeatedly until out of the programming mode.

NOTE! Password can be number or letter characters up to 4 digits.

Units Settings Menu
This menu is used to set the units for flow, temperature, and pressure as well as the setting of reference temperature and reference pressure.

These values will be set at Fox Thermal using information supplied by the customer. These values can be changed to match a new application. The units setting is accessed from the Main Menu. To access the Unit Settings Menu:

```
        MAIN MENU
I/O     FLO     DSP     EXIT
```

F1 F2 F3 F4

Press **FLO (F2)**:

```
        FLOW MENU 1
DGN     UNT     FM2     EXIT
```

F1 F2 F3 F4

Press **UNT (F2)** for Unit selection.

The screen will show:

```
FLO UNT = SCFM
NXT                OK
```

F1 F2 F3 F4

Press **NXT (F1)** to change selection and **OK (F4)** to accept.

NOTE! The totalizer (total flow measured) will roll over when reaching a certain value. The maximum value is dependent on the flow units selected (see Totalizer Rollover p. 69).

Flow Units

Selections for flow units are:

SCFM	KG/M	LBS/D	SM3/H	MSCFD (MCFD)
SCFH	KG/S	NLPH	SM3/D	MMSCFD (MMCFD)
NM3/H	LBS/H	NLPM	NM3/D	MCFD (MSCFD)
NM3/M	LBS/M	NLPS	SLPM	MMSCFM (MMCFM)
KG/H	LBS/S	SM3/M	SCFD	MT/H

WARNING! Changing the flow units will automatically recalculate the 4-20mA range values, the Pulse Output maximum flow, and the flow cutoff. The Pipe ID will change between inches and millimeters to match Imperial vs Metric flow rates.

Temperature Units

After pressing **OK (F4)** to accept the Flow unit, the display will prompt for the temperature unit setting:

```
TMP UNT= ° F
NXT                OK
```

F1 F2 F3 F4

Press **NXT (F1)** to change selection and **OK (F4)** to accept.

Selections for Temperature units are: °C or °F

NOTE! To adjust the scaling of the 4-20mA temperature output after changing the temperature units, reference p. 51.

Reference Temperature

After pressing **OK (F4)** to accept the temperature unit setting, the display will prompt for temperature reference in selected unit.

```
TmpRef = 60 °F
CHG                    OK
```

F1 F2 F3 F4

Press **CHG (F1)** to change the reference and **OK (F4)** to accept.

Pressure Units
After pressing **OK (F4)** to accept the reference temperature, the display will prompt for the reference pressure unit selection:

```
PRES UNT= Psia
NXT                    OK
```

F1 F2 F3 F4

Press **NXT (F1)** to select next entry and **OK (F4)** to accept.

Selections are:

mmHG = Millimeters of mercury (absolute)
Psia = Pounds per square inch absolute
bara = Bar absolute

Reference Pressure
After the pressure unit selection is made, the display will show a menu to enter the reference pressure:

```
PresRef= 14.7
CHG                    OK
```

F1 F2 F3 F4

Press **CHG (F1)** to change it and **OK (F4)** to accept.

Accessing Flow Parameters and Alarm Settings
This is the menu used to set various flow parameter values. They are: Flow cutoff, pipe diameter, filter, high and low alarm for flow and temperature.

NOTE! The parameters in this menu are set to the customer specifications at the factory. They should only be changed when changing the application of the flow meter.

```
        MAIN MENU
I/O     FLO     DSP     EXIT
```

F1 F2 F3 F4

The menu is accessed from the Main Menu by pressing **FLO (F2)**:

```
        FLOW MENU 1
DGN    UNT    FM2    EXIT
```

F1 F2 F3 F4

Then press **FM2 (F3)**:

```
        FLOW MENU 2
GAS    SPC    PRM    EXIT
```

F1 F2 F3 F4

NOTE! The **SPC** function key will only appear and be accessible from a **Level 2** password.

Then press **PRM (F3)**. This will move into settings for flow cutoff, pipe diameter, and filter value. These settings will be followed by the high and low alarm settings for flow rate and/or temperature.

Programming Flow Parameters
Flow Cutoff
The first parameter is Flow Cutoff:

```
CUTOFF = 2.0  SCFM
CHG                OK
```

F1 F2 F3 F4

Enter the value for the flow cutoff and then press **OK (F4)**. When the flow rate falls below the flow cutoff, the flow meter will display a flow value of zero.

Pipe Diameter
To set the pipe diameter, enter the pipe diameter in **inches** or **millimeters** and then press **OK (F4)**.

```
Pipe_id  = 3.068  In
CHG                OK
```

F1 F2 F3 F4

Use millimeters for metric flow unit selections and inches for English flow unit selections. This selection is dependent on the flow unit selected (English vs metric). If the pipe/duct is a square or rectangle, the hydraulic diameter (equivalent value for a round pipe) must be entered for the pipe ID.

Filter Value
The filter value is entered in seconds. The allowable time constant range is 0.8 to 10 seconds. The filter time interval is proportional to the dampening.

Enter the filter value and then press **OK (F4)**.

```
FILTER = 0.8 sec
CHG                    OK
```

F1 F2 F3 F4

Programming High and Low Alarm Settings
Settings for the alarms directly follow the flow parameters for flow cutoff, pipe diameter, and filter value. These alarms can be used without the digital output assigned to the alarm. If that is the case, the alarm status will only be shown on the display, through serial communication, or FT4X View™. If the digital output is assigned to an alarm, changing the value here will change that setting.

High Flow Rate Alarm
This is the upper flow limit alarm value that can be associated with the alarm output. An alarm code is generated when the flow value exceeds this limit. If no alarm is needed, set this value to zero.

To set the parameters for a high flow rate alarm, press **CHG (F1)**:

```
HiFloAlm = 1234  SCFM
CHG                    OK
```

F1 F2 F3 F4

Press **OK (F4)** to accept the value.

Low Flow Rate Alarm
This is the lower flow limit alarm value that can be associated with the alarm output. An alarm code is generated when the flow value is below this limit. If no alarm is needed, set this value to zero.

To set the parameters for a low flow rate alarm, press **CHG (F1)**:

```
LoFloAlm = 100 SCFM
CHG                    OK
```

F1 F2 F3 F4

Press **OK (F4)** to accept the value.

High Temperature Alarm
This is the upper temperature limit alarm value that can be associated with the alarm output. An alarm code is generated when the temperature value exceeds this limit. If no alarm is needed, set this value to zero.

To set the parameters for a high temperature alarm, press **CHG (F1)**:

```
HiTmpAlm = 200 F
CHG                    OK
```

F1 F2 F3 F4

Press **OK (F4)** to accept the value.

Low Temperature Alarm
This is the lower temperature limit alarm value that can be associated with the alarm output. An alarm code is generated when the temperature value is below this limit. If no alarm is needed, set this value to zero.

To set the parameters for a high temperature alarm, press **CHG (F1)**:

```
LoTmpAlm = 20 F
CHG                    OK
```

F1 F2 F3 F4

Press **OK (F4)** to accept the value.

Simulation
This menu allows for simulation of flow rate and temperature. It should only be used for testing and demonstration purposes. **Make sure to return all of these simulation values to zero, before returning to the normal mode of operation.**

CAUTION! If the 4-20mA and/or the pulse/alarm outputs are connected to controllers, set the controllers to "manual" to ensure that the simulated signals do not cause false controller action.

The menu is accessible from the Main Menu by pressing **FLO**:

```
        FLOW MENU 1
DGN    UNT    FM2    EXIT
```

F1 F2 F3 F4

Pressing **DGN (F1)** will show:

```
    DIAGNOSTIC
SIM    CAL-V          EXIT
```

F1 F2 F3 F4

Pressing **SIM (F1)** will show:

```
Simulate Flow?
YES                    NO
```

F1 F2 F3 F4

Press **YES (F1)** to continue.

```
FloSim = 0 SCFM
CHG                    OK
```

F1 F2 F3 F4

Enter the value and then press **OK (F4)**.

NOTE! Enter zero to disable this feature.

```
Simulate Temp?
YES                    NO
```

F1 F2 F3 F4

Press **YES (F1)** to continue.

```
TmpSim = 0 C
CHG                    OK
```

F1 F2 F3 F4

Enter the value and then press **OK (F4)**. Enter zero to disable this feature.

```
ENABLE SIM?
YES                    NO
```

F1 F2 F3 F4

Press **YES (F1)** to start the simulation mode, otherwise press **NO (F4)**. Upon pressing either key, the program will return to the FLOW MENU 1 screen.

NOTE! Simulation Mode will be cleared if the power is cycled.

K Factor

The K Factor allows the user to adjust the meter's calibration. The Fox Thermal flow meter increases the calculated flow rate by the K Factor. This results in a direct scaling of the meter's output across the entire full range.

The K Factor parameter is accessed from the "Flow Menu 2" menu by entering a **Level 2** password "9111" and pressing the **SPC** key **(F2)**.

```
FLOW MENU 2
GAS   SPC   PRM   EXIT
```

F1 F2 F3 F4

The following screen will be displayed:

```
K fact=0%
CHG                OK
```

F1 F2 F3 F4

Press **CHG (F1)**. Add the correction factor and press **OK (F4)**.

If you want the flow meter to read 5% higher, enter 5.0%.
If you want the flow meter to read 5% lower, enter -5.0%.
If an existing K Factor is present, add the additional K Factor to the existing value.

Upon pressing **OK (F4)**, an option to restore the database will follow.

Restore Database
In case of user error, the ability to restore the meter to the original factory settings can be achieved in this menu. The display will show:

```
RESTORE DATABASE?
YES                NO
```

F1 F2 F3 F4

Press **YES (F1)** ONLY if you want to restore your database to the initial factory settings that the meter was shipped with. All current user-entered settings will be overwritten. The green LP3 LED will flash at a faster pace until the recall is performed.
Upon pressing **OK (F4)**, an option to reset CRC will follow.

Reset CRC
If the NVRAM CRC check fails (Error Code 36), the programmed settings values will need to be verified and corrected before clearing the error. Call Fox Thermal Customer Service if you need assistance.

```
RESET CRC?
YES                NO
```

F1 F2 F3 F4

Press **YES (F1) ONLY** if you want to reset the CRC and generate a new CRC value.

Enable FC20 Flow Conditioner
The flow conditioner parameter should be enabled when the FT4X is used with a FC20 style flow conditioner. The parameter will be automatically set by the factory when ordering the flow meter with the flow conditioner. When the flow conditioner is added separately in the field, the flow conditioner parameter must be turned on to compensate for the measurement effect.

```
FC20=Off
NXT                    OK
```

F1 F2 F3 F4

Reset Total and Elapsed Time
Enter the flow totalizer and elapsed time screen by pressing the **F3** and **F4** keys at the same time in the normal running mode.

```
RESET TOTAL ?
NO                    YES
```

F1 F2 F3 F4

Press **YES (F4)** and enter password to reset total and elapsed time. Press **NO (F1)** to cancel.

NOTE! This feature is not available on non-resettable units.

Totalizer Rollover: The FT4X has an automatic roll-over function. The total flow count of the FT4X will roll over after 99,999,999,999. Except for:

MSCFD:	999,999,999
MMSCFM:	9,999,999
MMSCFD:	999,999

Calibration of the Fox Thermal Model FT4X Thermal Flow Meter
To ensure that all Fox Thermal flow meters meet specified performance parameters and provide accurate, repeatable measurements in the field, all calibrations are performed with NIST-traceable flow standards. Each meter is shipped from the factory with a Fox Thermal Calibration Certificate.

Calibration Validation
Calibration Validation allows customers to validate the accuracy and functionality of the meter in the field with a push of a button. By performing a simple test, the operator can verify that the meter is running accurately.

CAL-V Calibration Validation Test
Fox Thermal has developed the CAL-V™ Calibration Validation test to help our customers avoid sending the meter back for annual or biennial recalibration.

CAL-V™ ensures the repeatability, functionality of the sensor and its associated signal processing circuitry, and cleanliness of the sensor.

During the CAL-V™ calibration validation test, the microprocessor adjusts current to the sensor elements and determines the resulting electrical characteristics. Data within established tolerances confirms the meter is accurate.

Recommended Conditions for Performing CAL-V™ Test
Fox Thermal recommends the CAL-V™ test be run under flowing conditions, especially in smaller pipe sizes. If the CAL-V™ test does not produce a "PASS" result, refer to "CAL-V™ Test Results" on page 72.

NOTE! If the CAL-V™ test is performed using the Fox Thermal ModbusView or FT4X View™ Software, at the completion of the test, a CAL-V™ Certificate may be printed for a record of the test. This certificate will display a pass/fail result.

Performing the CAL-V™ Calibration Validation Test

Press **FLO (F2)** from the Main Menu. The display will show:

```
      FLOW MENU 1
DGN    UNT    FM2     EXIT
```

F1 F2 F3 F4

Press **DGN (F1).** The display will show:

```
     DIAGNOSTIC MENU
SIM    CAL-V          EXIT
```

F1 F2 F3 F4

Press **CAL-V (F2)**. The display will show:

```
        CAL-V MENU
VER                 EXIT
```

F1 F2 F3 F4

Press **VER (F1)** to perform the CAL-V™ verification test.

```
        VERIFY CAL-V?
YES                 NO
```

F1 F2 F3 F4

Press **YES (F1)** to continue.

```
Flo:Hold value
NXT         EXIT    OK
```

F1 F2 F3 F4

Press **NXT (F1)** to toggle between "Hold value" and "Go to zero". During the CAL-V™ test, "Hold value" will keep the 4-20mA and pulse outputs at the last value measured. "Go to zero" will set the flow 4-20mA and pulse outputs to the equivalent of zero flow. Press **OK (F4)** to continue with the CAL-V™ test.

```
Take Control
off-line    EXIT    OK
```

F1 F2 F3 F4

When ready to begin the test, press **OK (F4)**.

```
Verifying CAL-V
y.yyy           T=xx
```

F1 F2 F3 F4

This test takes 5 minutes (300 seconds). During the test, the display will show the CAL-V™ value changing as the power to the sensor is adjusted. "T=xx" is a CAL-V™ timer indicating how much time is left to finish the test.

CAL-V™ Test Results

Upon test completion, the final CAL-V™ value will be displayed along with a Pass, Fail, or Warning message:

- Pass: less than ±0.80
- Warning: between ±0.80 to ±1.0
- Fail: greater than ±1.0

Recommended next steps if a "Warning" or "Fail" result is displayed:

- Run the test again under a higher flow rate if possible.
- Remove the probe from the pipe, clean the sensor, and perform the test again under a normal or high flow rate.

If a "Warning or "Fail" result is displayed after repeating the test, please call Fox Thermal Service at (831) 384-4300 for assistance.

```
CAL-V = 0.251
Pass                    OK
```

F1 F2 F3 F4

Press **OK (F4)** to exit the menu when the test is complete.

NOTE! The FT4X will stop measuring flow when performing this test.

CAUTION! For applications with temperature exceeding 250°F (121°C), CAL-V™ test results may vary. Periodic inspection for damage and cleaning of the sensor elements is required.

Gas-SelectX® Available Gases and Gas Mix Menus

This menu allows the user to select a gas or gas mix from a list of gases/gas mixtures available in the Fox Thermal model FT4X flow meter. When entering the FT4X gas menu the user will have three choices:

1. Pure Gas Menu - list of 14 gases
2. Gas Mix (MIX) - any combination of the gases in the Mixed Gas menu
3. Oil & Gas Mix (O&G) - any combination of the 14 gases in the Oil & Gas menu

The molar percentages of the gases in any mix are programmable in 0.000001% increments. Gases may be mixed in any proportion equal to 100%. "Natural gas" in the menu is defined as the NAESB Natural Gas mix (94.9% Methane, 0.7% CO2, 1.6% N2, 0.3% Propane, and 2.5% Ethane). Gases and gas mixes available in the Gas-SelectX® feature include:

Pure Gas Menu	Mixed Gas Menu			O & G Menu
Air	Methane	Pentanes *	R125 **	Methane (C1)
Argon	Carbon Dioxide	Hexanes*	R134a **	Ethane (C2)
Butane	Nitrogen	Heptanes*	R143a **	Propane (C3)
Carbon Dioxide	Helium	Octanes*	R22 **	i-Butane (C4)
Methane	Argon	Nonanes+* †	R32 **	n-Butane (C4)
Natural Gas (NAESB)	Hydrogen	Ammonia **	SF6 **	Pentanes (C5)
Nitrogen	Air	Chlorine **	SO2 **	Hexanes (C6)
Oxygen	Propane	Carbon Monoxide **	Water **	Carbon Dioxide (CO2)
Helium	Butane	Decane **	Acetone **	Nitrogen
Hydrogen	Oxygen	Ethanol **	Propadiene ***	Heptanes (C7)
Propane	Ethane	H2S **	1-Butyne ***	Octanes (C8)
Ethane	Ethylene	Isopentane **	Benzene ***	Nonanes+ (C9+) †
Ethylene	Propylene	Methanol **	Ozone ***	Ethylene
Propylene	i-Butane*	N2O **		Propylene

† Nonanes+ are the total of all gases C9 & greater (C9+).
**Only available on FT4X with firmware v8.3 or later.*
***Only available on FT4X with firmware v10.0 or later.*
****Only available on FT4X with firmware v10.1 or later.*

NOTE! For the latest gas and gas mix menu, visit the Fox Thermal Website: www.foxthermal.com

Accessing the Gas-SelectX® Gas Selection Menu Feature
Enter the programming mode on the meter (refer to p. 50) and then follow these instructions to access the Gas-SelectX® feature:

```
MAIN MENU
I/O   FLO   DSP   EXIT
```

F1 F2 F3 F4

Press **FLO (F2)** from the Main Menu to enter Flow Menu 1.

```
FLOW MENU 1
DGN   UNT   FM2   EXIT
```

F1 F2 F3 F4

Press **FM2 (F3)** to get to Flow Menu 2.

```
FLOW MENU 2
GAS   SPC   PRM   EXIT
```

F1 F2 F3 F4

Press **GAS (F1)** to access the Gas-SelectX® feature. The display will show the gas setting (Pure Gas, Mix, or O&G Mix):

```
GAS=O&G Mix
NXT                OK
```

F1 F2 F3 F4

Press **NXT (F1)** repeatedly until the correct selection is shown and then press **OK (F4)** to accept the setting.

Selections are: Pure Gas
Mix
O&G Mix

In the Pure Gas menu, the user can choose from a list of pure gases. The Mix menu is used for programming a specific mixture of gases. The O&G Mix menu is used for programming a specific mixture of common gases found in the Oil & Gas industry.

NOTE! Switching between Pure Gas, Mix, or O&G Mix settings will clear the previous gas settings.

See previous page for gases available in each menu.

Gas-SelectX® Single Gas Menu
To select a pure gas, choose **"Pure Gas" (F1)** and then press **"OK" (F4)** to accept the setting:

```
GAS=Air
NXT                EXIT
```

F1 F2 F3 F4

To choose any pure gas, press **NXT (F1)** to cycle through until the correct gas is displayed and press **OK (F4)** to select the gas. "Gas-SelectX® Available Gases and Gas Mix Menus" on page 73.

Choosing a Gas: Gas Mix Menu and Oil & Gas Menu
To create a gas mix, choose either **"Mix"** or **"O&G Mix"** from the GAS menu.

```
GAS =Mix
NXT                OK
```

F1 F2 F3 F4

The screen will show the first gas available in the menu:

```
Methane=0%
CHG                OK
```

F1 F2 F3 F4

This screen shows the percentage of the gas mixture allocated to Methane. In this case, it shows 0%. To program the specific mixture of Methane, press **CHG (F1)**.

```
Methane=30.5%
 UP     DN     NXT    OK
```

F1 F2 F3 F4

To set the percentage of methane in the gas mix, press **UP (F1)** or **DN (F2)** to choose the first digit of the percentage. Press **NXT (F3)** to move to the next digit in the percentage and then use **UP (F1)** or **DN (F2)** again to choose the next digit of the percentage. Once the desired methane percentage is displayed, press **OK (F4)**. The display will move to the view of the concentration of each of the subsequent list of gases.

```
Ethane=0%
CHG                OK
```

F1 F2 F3 F4

Once the desired gas percentages are programmed, press **OK (F4)**. One of the following messages will appear:

```
Gas Mix (100%)
CHG                    OK
```

-or-

```
Err: Mix=(110%)
CHG
```

F1 F2 F3 F4 F1 F2 F3 F4

If the gas mix does not equal 100%, press **CHG (F1)** to return to the gas entry menu.

Once the "Gas Mix (100%)" message appears, you have successfully programmed the gas mix in Gas-SelectX® and can exit. Press **OK (F4)** to set the mixture.

After the gases are programmed, the FT4X will begin to monitor flow based on the algorithm for the gas/gas mix selected in the Gas-SelectX® feature. The screen will show the flow in units and the total flow similar to the example below:

```
1162.52 SCFM
Tot=6205012.50 SCF
```

F1 F2 F3 F4

In normal operating mode, the gas selection can be seen on display 3 (see p. 49).

Logs Introduction
The data logger is internal to the model FT4X flow meter, includes extra memory, and has a battery-backed real-time clock (RTC). The RTC maintains accurate time when power is off to the flow meter. The battery has a life expectancy exceeding 10 years. Logs are the data/files maintained in the FT4X flow meter memory. Logs can be viewed by the user without entering a password. To access the Logs menu and view data press **F1** and **F2** on the front FT4X front panel simultaneously.

The following data is viewable in the Logs menu:
- 40 daily totals (24-hour flow totals) based on Contract Time (isolated start time for recording daily flow total) set by the user.
- Local date and time set by the user.
- Current gas composition programmed into the meter.
- Current flow meter configuration and meter settings.
- Engineering data including non-resettable power-off totalizer.

The following is only available by download by using the FT4X View™ Software:
- Date/time stamped power off and power on events.
- Event/alarm logs with date/time stamps including all changes in flow meter settings (i.e. 4-20mA, pipe size, changes to gas composition) and date/time stamped alarms (i.e. meter self-diagnostic alarms, out of user set flow or temperature limits, power on/power off events).

NOTE! To change flow meter settings or run the CAL-V™ calibration validation test the user must enter the password-protected Set Parameter menu.

NOTE! The totalizer time counter is not related to the 40 24-hour totals. The totalizer and elapsed time counter run until reset. The elapsed time counter is the number of hours since the totalizer was reset. The totalizer and elapsed time counter do not increment when the flow meter power is off.

24-hour Log
- Total number of records possible: 40
- Frequency of data being logged: once per day

Configuration change, Events, and Alarms Log
- Total number of records possible: 5000
- Frequency of data being logged: the change or event is logged when it is detected. Note that a "Power OFF" event is not written until the meter is powered on, at which time a "Power ON" event is also written

BLM Log
- Total number of records possible: 412,876
- Each record contains date & time (6 bytes), type (1 byte), average hourly flow (4 bytes), average hourly temperature (4 bytes), and total flow for the hour (4 bytes). One byte is reserved.
- Frequency of data being logged: once per hour

Displaying Data Log Records
From the normal operating mode, press **F1 & F2** keys at the same time:

```
LOGS MENU1
LOG   TOT   ENG   EXIT
```

F1 F2 F3 F4

LOG (F1) will enter the Logs Menu 2:
- The Gas or Gas Mix can be viewed here
- The Meter's configuration settings can be viewed here
- The most recent CAL-V™ Calibration Validation record can be viewed here

TOT (F2) will enter the 40 24-Hour Daily Totals log.
- Each of the 40 24-Hour Daily Totals can be reviewed

ENG (F3) will enter the Engineering Screens.
- The Engineering screens show information about alarm settings, serial numbers, firmware versions, CSV, and output information

Viewing the Gas/Gas Mix
From the Logs Menu 1, choose **LOG (F1)** to enter Logs Menu 2:

```
LOGS MENU2
GAS   CFG   VAL   EXIT
```

F1 F2 F3 F4

Press **GAS (F1)** to view the current gas, gross heating value, and density. If a pure gas is chosen, the gas will be listed with a value of 100%. If a gas mix or O&G gas mix have been chosen, the screen will show either 'Mix' or 'O&G Mix':

```
Methane 100%
OK
```

F1 F2 F3 F4

```
Gas=Mix
OK
```

F1 F2 F3 F4

```
Gas=O&G Mix
OK
```

F1 F2 F3 F4

With 'Mix' and 'O&G Mix', each subsequent screen will display the values of each possible gas menu component with their percentage value (even if the gas is set to 0%):

```
Air%=0.0
NXT   PRV   EXIT
```

F1 F2 F3 F4

```
Methane%=45.0
NXT   PRV   EXIT
```

F1 F2 F3 F4

Press **NXT (F1)** to view the next gas in the menu. Press **PRV (F2)** to view the previous gas. Press **EXIT (F4)** to go back to Logs Menu 2.

Once the composition of the gas has been viewed, the gross heating value will be displayed:

```
1014.1 BTU/Ft3
NXT     PRV            EXIT
```

F1 F2 F3 F4

Press **NXT (F1)** to view the gas density:

```
DNS=0.6800 Kg/M3
        PRV            EXIT
```

F1 F2 F3 F4

Press **EXIT (F4)** to go back to Logs Menu 2.

Viewing the Meter's Configuration

The meter's configuration settings include the flow units, temperature units, pressure units, 4-20mA output settings, alarm settings, reference pressure, reference temperature, K-Factor, flow cutoff, pipe ID, filter, the meter's serial number, the firmware version, and the release date of the meter's firmware.

NOTE! If any of these settings are to be changed, the operator must enter the programming mode with a password. See the Operation section of this Manual for further details on programming the meter's settings.

From the Logs Menu 1, choose **LOG (F1)** to enter Logs Menu 2:

```
        LOGS MENU 1
LOG     TOT     ENG     EXIT
```

F1 F2 F3 F4

From the Logs Menu 2, choose **CFG (F2)** to view the meter's validation screens.

```
        LOGS MENU 2
GAS     CFG     VAL     EXIT
```

F1 F2 F3 F4

The first screen will display the flow meter's flow unit setting. In this case, SCFM:

```
Flow: SCFM
NXT     PRV            EXIT
```

F1 F2 F3 F4

Press **NXT (F1)** to view the next setting in the log. Press **PRV (F2)** to move back to the previous setting. Press **EXIT (F4)** to go back to Logs Menu 2.

Viewing the Most Recent Calibration Validation Test Data
The meter's display will show the two (2) most recent logs of data for the CAL-V™ Calibration Validation tests that were performed on the meter.

From the Logs Menu 2, choose **VAL (F3)** to view the meter's configuration screens.

```
      LOGS MENU 2
GAS    CFG    VAL    EXIT
```

F1 F2 F3 F4

The most recent test value data will be displayed first:

```
CAL-V=0.1
NXT    PRV           EXIT
```

F1 F2 F3 F4

Press **NXT (F1)** to view the most recent CAL-V™ test result:

```
CAL-V=Pass
NXT    PRV           EXIT
```

F1 F2 F3 F4

A 'Pass', 'Warning', or 'Fail' message will be displayed. Press **NXT (F1)** to view the previous test's data. The previous test value data will be displayed next:

```
P CAL-V=-0.14
NXT    PRV           EXIT
```

F1 F2 F3 F4

Press **NXT (F1)** to view the previous CAL-V™ test result:

```
P CAL-V=Pass
NXT    PRV           EXIT
```

F1 F2 F3 F4

A 'Pass', 'Warning', or 'Fail' result will be displayed. Press **EXIT (F4)** to return to Logs Menu 2.

Viewing 24-Hour Daily Totals
From the Logs Menu 1, choose **TOT (F2)** to enter the 24-hour Daily Total Log:

```
      LOGS MENU1
LOG    TOT    ENG    EXIT
```

F1 F2 F3 F4

The first screen will show the most recent, Day 1 total:

```
Day1=0SCF
NXT     PRV          EXIT
```

F1 F2 F3 F4

Pressing **F1** will display the next 24 hour record, Day 2 Total, **F2** will display the previous record.

Press **F4** to exit to the normal mode at any time.

NOTE! The data logger supports 40 flow total records, Day 1 being the latest recorded value and Day 40 being the oldest.

Resetting Total
To reset the total, you must exit the Logs and start from the normal operating mode. Refer to "Reset Total and Elapsed Time" on page 69 for instructions on how to reset the total.

NOTE! Resetting the total will not affect the data logger's 40 24-hour totals.

Viewing the Engineering Screens
From the Logs Menu 1, choose **ENG (F3)** to enter the Engineering Screens.

```
      LOGS MENU1
LOG    TOT    ENG    EXIT
```

F1 F2 F3 F4

There are ten (10) screens (10-19) to view meter data:

- Screen 10 - flow rate measured by the meter, CSV of the sensor measurement circuit.
- Screen 11 - digital control counts of the pulse and 4-20mA outputs.
- Screen 12 - Elapsed time of meter operation and the status of meter operation.
- Screen 13 - active alarms and lists the firmware version of the meter.
- Screen 14 - serial numbers for the main and bridge boards
- Screen 15 - serial numbers for the meter and the sensor.
- Screen 16 - high and low flow alarm settings.
- Screen 17 - high and low temperature alarm settings.
- Screen 18 - total number of power cycles, number of errors in total flow measurement.
- Screen 19 - most recent CAL-V™ value, elapsed time of meter powered off (in hours).

Modbus Communication Scope
This portion of the manual describes the Modbus implementation using RS485 serial communication physical layer for the Fox Thermal FT4X mass flow meter based on the Modicon Modbus Protocol (PI-MBUS-300 Rev. J).

Modbus Protocol
Modbus Protocol is an application layer messaging protocol that provides client/sever communications between devices. Modbus is a request/reply protocol and offers services specified by function codes.

The size of the Modbus Protocol Data Unit is limited by the size constraint inherited from the first Modbus implementation on Serial Line network (max. RS485 Application Data Unit = 256 bytes). Therefore, Modbus PDU for serial line communication = 256 – Server address (1 byte) – CRC (2 bytes) = 253 bytes.

RS485 ADU = 253 + Server address (1 byte) + CRC (2 bytes) = 256 bytes.

For more information on Modbus go to the web site http://www.modbus.org/.

Command Request:
<Meter Address> <Function code> <Register start address high> <Register start address low> <Register count high> <Register count low> <CRC high> <CRC low>

Command Response:
<Meter Address> <Function code> <Data byte count> <Data register high> <Data register low> ... <Data register high> <Data register low> <CRC high> <CRC low>

NOTE! The data shown in brackets < > represents one byte of data.

Modbus Indicators
Green LED indicator LP3 cycles on and off to indicate that the FT4X is operating. Orange LED indicator LP2 blinks when Modbus signals are received and yellow LP1 blinks when Modbus signals are transmitted. The LEDs are located behind the display panel.

Communication Protocol and Parameters
To program the communication parameters, start at the Main Menu:

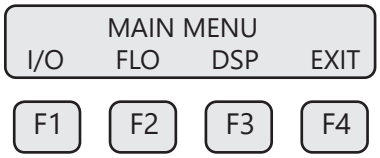

Then press **I/O (F1)** to set Inputs/Outputs:

```
        SET I/O
COM          420     EXIT
```

F1 F2 F3 F4

Then press **COM (F1)** to select communication parameters.

Set Bus protocol for Modbus:

```
Comm=Modbus
NXT                  OK
```

F1 F2 F3 F4

Press **NXT (F1)** repeatedly until Modbus is selected as shown and then press **OK (F4)** to accept the setting.

The following communication settings apply only to Modbus:

```
Baud=9600
NXT                  OK
```

F1 F2 F3 F4

Press **NXT (F1)** repeatedly until the correct selection is shown then press **OK (F4)** to accept the setting.

Selections are:	115200	38400	4800
	76800	19200	2400
	57600	9600	1200

```
Parity=EVEN
NXT                  OK
```

F1 F2 F3 F4

Press **NXT (F1)** repeatedly until the correct selection is shown and then press **OK (F4)** to accept the setting.

Selections are: NONE
ODD
EVEN

```
Address=02
CHG                    OK
```

F1 F2 F3 F4

Press **CHG (F1)** to change the address and then press **OK (F4)** to accept the setting.

Selections are between 01 and 247.

NOTE! Power cycle is required for the new settings to take effect.

Modbus Function Codes Supported by the FT4X
The FT4X supports the following commands:
1) Command 03: Read multiple registers
2) Command 04: Read single register
3) Command 06: Write single register
4) Command 16: Write multiple registers (limited to gas percentage register pairs)

Read Multiple Registers (command 03)
This command reads one or more 16-bit registers from the FT4X and has the following format:

Request:
<Meter Address> <Command code=03> <Register start address high> <Register start address low> <Register count high> <Register count low> <CRC high> <CRC low>

Response:
<Meter Address> <Command code=03> <Byte count> <Data high><Data low> ... <Data high><Data low> <CRC high> <CRC low>

Example: Request data register at starting address 0x0000 and specifying 2 registers

<0x01> <0x03> <0x00> <0x00> <0x00> <0x02> <0xC4> <0x0B>

Response:
<0x01> <0x03> <0x04> <xx> <xx> <xx> <xx> <CRC high> <CRC low>

Where xx xx is the data register value.

Read Single Register (Command 04)
This command is used to read a single 16-bit register and has the following format:

Request:
<Meter Address> <Command code=04> <Register address =0> <Register address =0> <Register count =0> <Register count =1> <CRC high> <CRC low>

Response:
<Meter Address> <Command code=04> <Byte count =2> <Status High><Status Low> <CRC high> <CRC low>

Write Single Register (Command 06)
This command is used to perform miscellaneous functions such as clearing the totalizer and elapsed time. The register address is Modbus=40018 and the data to write is described in table 5.1.

Request:
<Meter Address> <Command code=06> <Register address high=0x00> <Register address low=0x11> <Register data high=0x00> <Register data low =0x02> <CRC high> <CRC low>

Response:
<Meter Address> <Command code=06> <Register address =0x00> <Register address =0x11> <Register data=0x00> <Register data =0x02> <CRC high> <CRC low>

Write Multiple Registers (Command 16)
This command is restricted to writing to the gas mix percentage settings in registers 40058 – 40091. The preset single register command is not allowed to write to these registers. The percentage settings are 32-bit floating point numbers in units of percent. A setting of 12.7 means 12.7%.

Request message:
<Meter Address> <Command code=16 (0x10)> <Starting register address MSB> <Starting register address LSB> <Number of registers MSB> <Number of registers LSB> <Byte count> <Register data MSB> <Register data LSB> … <Register data MSB> <Register data LSB> <CRC LSB> <CRC MSB>

Response message:
<Meter Address> <Command code=16 (0x10)> <Starting register address MSB> <Starting register address LSB> <Number of registers high> <Number of registers low> <CRC LSB> <CRC MSB>

NOTE! Response Message issue with Firmware v7.0 and earlier: the starting register in the Response Message is incorrect.

Data Log Commands
Modbus can be used to access and program the data logging functions of the FT4X.

Select Record (command 06, Preset Register, Modbus Address 40032)
This command is used to select a 24 hour record that is going to be read from the data log buffer using command 03
Address register = 40032
Data = xx. (xx = record select (hex 0-63, decimal 0-39)

NOTE! Record 0 is the latest and 39 is the oldest.

Request:
<Meter Address> <Function code=06> <Register address high=0x00> <Register address low=0x1F> <Register data high=0x00> <Register data low =0xx> <CRC high> <CRC low>

Response:
<Meter Address> <Function code=06> <Register address =0x00> <Register address =0x1F> <Register data=0x00> <Register data =0xx> <CRC high> <CRC low>

Read 24 Hour Record (command 03, Read Holding register, Modbus Address 40034)
This register is used to get the data for a single 24 hour record in the floating point format. Before issuing that command, a preset command has to be sent to select the record to be read.
Request:
<Meter Address> <Function code=03> <Register address high=0x00> <Register address low=0x21> <No. of Point high=0x00> <No. of Point Low =01> <CRC high> <CRC low>

Response:
<Meter Address> <Function code=03> <Byte count=2><Register data=xx> <Register data =xx> <CRC high> <CRC low>

NOTE! The register returns a floating point value in IEEE754 format.

Clear Data Log (command 180 (0xB4), Modbus Address 40018)
This command is used to clear all records in the log.
Address register = 40018
Data = 180 (0xB4).

NOTE! Some log values might be readable until the meter is power cycled. Cleared values will return a value of zero when read.

Request:
<Meter Address> <Function code=06> <Register address high=0x00> <Register address low=0x11> <Register data high=0x00> <Register data low =0xB4> <CRC high> <CRC low>

Response:
<Meter Address> <Function code=06> <Register address =0x00> <Register address =0x11> <Register data=0x00> <Register data =0xB4> <CRC high> <CRC low>

Populate Time Registers (Command 186 (0x8BA), Modbus Address 40018)
Write command value 186 to register 40018 to populate time registers 40044 - 40055, with the current time and date in the meter. Allow at least 0.25 seconds for the time registers to update completely before reading them..

NOTE! The time can be read but can NOT be set using Modbus.

Floating point data layout

Each 32-bit floating point value uses two consecutive Modbus registers. The most significant byte of the lower numbered register holds the least significant byte of the significand. The least significant byte of the lower numbered register holds the next most significant byte of the significand. The most significant byte of the higher numbered register holds the sign bit and most significant 7 bits of the exponent. The least significant byte of the higher numbered register holds the least significant bit of the exponent and the most significant 7 bits of the significand.

In the following tables:
S0 – S23 are the significand bits from least to most significant.
E0 – E7 are the exponent bits from least to most significant.
Sign is 1 if the number is negative, and 0 if the number if positive.

Lower numbered register															
15	14	13	12	11	10	9	8	7	6	5	4	3	2	1	0
S15	S14	S13	S12	S11	S10	S9	S8	S7	S6	S5	S4	S3	S2	S1	S0

Higher numbered register															
15	14	13	12	11	10	9	8	7	6	5	4	3	2	1	0
Sign	E7	E6	E5	E4	E3	E2	E1	E0	S22	S21	S20	S19	S18	S17	S16

Since the Modbus register data is sent most significant byte first and the registers are sent lowest numbered first, a floating point value will look like this in the data stream:

First byte (MSB of lower register)								
Data bit	7	6	5	4	3	2	1	0
Value bit	S15	S14	S13	S12	S11	S10	S9	S8

Second byte (LSB of lower register)								
Data bit	7	6	5	4	3	2	1	0
Value bit	S7	S6	S5	S4	S3	S2	S1	S0

Third byte (MSB of higher register)								
Data bit	7	6	5	4	3	2	1	0
Value bit	Sign	E7	E6	E5	E4	E3	E2	E1

Fourth byte (LSB of higher register)								
Data bit	7	6	5	4	3	2	1	0
Value bit	E0	S22	S21	S20	S19	S18	S17	S16

Example: Set the gas mix as 60% methane and 40% nonane.

This requires setting the thirty-four registers 40058 through 40091. Register pair 40058-40059 will be set to 60.0, register pair 40090-40091 will be set to 40.0, and the rest of the register pairs between them will be set to 0.0.

The message byte stream will be (bytes on the same line are sent leftmost first):

<0x01>	Address = 1
<0x10>	function = write multiple registers
<0x00> <0x39>	start index = fifty seven, meaning register 40058
<0x00> <0x22	register count = 34 (holding seventeen 32-bit floating point values)
<0x44>	number of data bytes = 68
<0x00> <0x00> <0x42> <0x70>	value = 60.0%
<0x00> <0x00> <0x00> <0x00>	value = 0.0%
<0x00> <0x00> <0x00> <0x00>	value = 0.0%
<0x00> <0x00> <0x00> <0x00>	value = 0.0%
<0x00> <0x00> <0x00> <0x00>	value = 0.0%
<0x00> <0x00> <0x00> <0x00>	value = 0.0%
<0x00> <0x00> <0x00> <0x00>	value = 0.0%
<0x00> <0x00> <0x00> <0x00>	value = 0.0%
<0x00> <0x00> <0x00> <0x00>	value = 0.0%
<0x00> <0x00> <0x00> <0x00>	value = 0.0%
<0x00> <0x00> <0x00> <0x00>	value = 0.0%
<0x00> <0x00> <0x00> <0x00>	value = 0.0%
<0x00> <0x00> <0x00> <0x00>	value = 0.0%
<0x00> <0x00> <0x00> <0x00>	value = 0.0%
<0x00> <0x00> <0x00> <0x00>	value = 0.0%
<0x00> <0x00> <0x42> <0x20>	value = 40.0%
<0xCA> <0x24>	CRC

Response message:

<0x01>	Address = 1
<0x10>	function = write multiple registers
<0x00> <0x39>	start index = fifty-seven = register 40058
<0x00> <0x44>	Number of data bytes written = 68
<0x10> <0x37>	CRC

Table 5.1: FT4X Modbus Registers

Modbus Register	Data Type	Description	Units
40001	32-bit int LSW	Flow	User selected
40002	32-bit int MSW		
40003	32-bit int LSW	Flow Total	User selected
40004	32-bit int MSW		
40005	32-bit int LSW	Temperature x10	Tenths of user selected
40006	32-bit int MSW		
40007	32-bit int LSW	Elapsed time x10	In Hours
40008	32-bit int MSW		
40009*	16-bit int	Firmware version x10 (scaled up for 16-bit format)	
40010		Reserved	
40011	16-bit int	Flow x 10 (flow scaled for 16-bits)	Tenths of user selected
40012	16-bit int	Flow x 100 (flow scaled for 16-bits)	Hundredths of user selected
40013	16-bit int	Total x 100 (flow total scaled for 16-bits)	Hundredths of user selected
40014*	32-bit float LSW	Gross Heating Value (GHV)	BTU/Ft3
40015*	32-bit float MSW		
40016	16-bit int	Status	
40017	16-bit int	Status 2	
40018	16-bit int	Control Register (write only): (integer format) Reset Total = 2 Perform CAL-V = 173 Abort CAL-V = 174 Reset 24hr total log = 180 Generate 24 hrs event = 182 Read RTC clock = 186	
40019*	16-bit int	Model Status (Read only) 0x04	
40020	32-bit float LSW	Flow	User selected
40021	32-bit float MSW		
40022	32-bit float LSW	Total	User selected
40023	32-bit float MSW		
40024*	32-bit float LSW	Reference pressure	User selected
40025*	32-bit float MSW		
40026	32-bit float LSW	Temperature	User selected
40027	32-bit float MSW		
40028	32-bit float LSW	Elapsed time	Hour
40029	32-bit float MSW		
40030	32-bit float LSW	Calibration validation result	
40031	32-bit float MSW		
40032	32-bit int LSW	tot24 record selection	Day
40033	32-bit int MSW		
40034	32-bit float LSW	tot24 selected record flow total	User selected
40035	32-bit float MSW		

Table 5.1: FT4X Modbus Registers (cont'd)

Modbus Register	Data Type	Description	Units
40036	32-bit float LSW	tot24 current day's flow total	User selected
40037	32-bit float MSW		
40038*	16-bit int	Flow Unit Code (SCFM = 0, SCFH = 1, NM3_H = 2, NM3_M = 3, KG_H = 4, KG_M = 5, KG_S = 6, LBS_H = 7, LBS_M = 8, LBS_S = 9, NLPH = 10, NLPM = 11, MMSCFD = 15, LBS_D = 16, SLPM = 17, NLPS = 18, MSCFD = 19, SM3_H = 20, MT_H = 21, NM3_D = 22, MMSCFM = 23, SCFD = 24, MCFD = 25, SM3M = 26, SM3D = 27)	User selected
40039*	16-bit int	Temp Unit Code (Degree F = 0, Degree C = 1)	User selected
40040*	16-bit int	Pressure Unit Code (MMHG = 0, PSIA = 1, BARA = 2)	User selected
40041 to 40043		Reserved	
40044	32-bit int LSW	Reserved for Current time: year portion (last 2 digits)	Year
40045	32-bit int MSW		
40046	32-bit int LSW	Reserved for Current time: month portion	Month
40047	32-bit int MSW		
40048	32-bit int LSW	Reserved for Current time: day portion	Day
40049	32-bit int MSW		
40050	32-bit int LSW	Reserved for Current time: hour portion	Hour
40051	32-bit int MSW		
40052	32-bit int LSW	Reserved for Current time: minute portion	Minute
40053	32-bit int MSW		
40054	32-bit int LSW	Reserved for Current time: second portion	Second
40055	32-bit int MSW		
40197*	32-bit float LSW	Gas Density	STP KG/M3
40198*	32-bit float MSW		
40199*	32-bit int LSW	Meter Serial Number	
40200*	32-bit int MSW		
40201*	16-bit int	ADC Status	
40202*	32-bit float LSW	Electronics Temperature	Degrees Celsius
40203*	32-bit float MSW		
40204*	16-bit int	Last CAL-V Year	Years
40205*	16-bit int	Last CAL-V Month	Month
40206*	16-bit int	Last CAL-V Day	Days
40207*	16-bit int	Last CAL-V Hour	Hours
40208*	16-bit int	Last CAL-V Min	Minutes
40209*	16-bit int	Last CAL-V Sec	Seconds
40210*	32-bit float LSW	Last CAL-V Value	
40211*	32-bit float MSW	Last CAL-V Value	
40212**	32-bit float LSW	Flow Cutoff	User selected
40213**	32-bit float MSW		
40214**	32-bit float LSW	Output Filter	
40215**	32-bit float MSW		

Table 5.1: FT4X Modbus Registers (cont'd)

Modbus Register	Data Type	Description	Units
40216**	32-bit float LSW	Pipe ID	Matches Flow Unit Selection (in or mm)
40217**	32-bit float MSW		
40218**	32-bit float LSW	Hi Flo Limit	User selected
40219**	32-bit float MSW		
40220**	32-bit float LSW	Lo Flo Limit	User selected
40221**	32-bit float MSW		
40222**	32-bit float LSW	Hi Temp Limit	User selected
40223**	32-bit float MSW		
40224**	32-bit float LSW	Lo Temp Limit	User selected
40225**	32-bit float MSW		
40226**	16-bit int	CH1 4-20mA Data Select [0=Flow, 1=Temp]	
40227**	32-bit float LSW	CH1 20mA Value	User Selected Flow or Temp Units
40228**	32-bit float MSW		
40229**	32-bit float LSW	CH1 4mA Value	User Selected Flow or Temp Units
40230**	32-bit float MSW		
40231**	16-bit int	CH1 NAMUR Setting [0=Not Used, 1=3.6mA, 2=21mA]	
40232**	16-bit int	CH2 4-20mA Data Select [0=Flow, 1=Temp]	
40233**	32-bit float LSW	CH2 20mA Value	User Selected Flow or Temp Units
40234**	32-bit float MSW		
40235**	32-bit float LSW	CH2 4mA Value	User Selected Flow or Temp Units
40236**	32-bit float MSW		
40237**	16-bit int	CH2 NAMUR Setting [0=Not Used, 1=3.6mA, 2=21mA]	
40238**	32-bit float LSW	K Factor	
40239**	32-bit float MSW		
40240**	32-bit float LSW	Ref Temp	User selected
40241**	32-bit float MSW		
40242**	32-bit float LSW	Flow Simulation Value	User selected
40243**	32-bit float MSW		
40244**	32-bit float LSW	Temperature Simulation Value	User selected
40245**	32-bit float MSW		
40246**	16-bit int	Simulation Status	Status Bytes
40247**	16-bit int	CAL-V Hold Flow [0=Go to Zero, 1=Hold Flow]	
40248**	16-bit int	Display 1 Line 1 [0=flow, 1=total, 2=elp time, 3=temp, 4=alarm]	
40249**	16-bit int	Display 1 Line 2 [0=flow, 1=total, 2=elp time, 3=temp, 4=alarm]	
40250**	16-bit int	Display 2 Line 1 [0=flow, 1=total, 2=elp time, 3=temp, 4=alarm]	
40251**	16-bit int	Display 2 Line 2 [0=flow, 1=total, 2=elp time, 3=temp, 4=alarm]	
40252**	16-bit int	Alternate Display [0=no alternating, 1=alternate]	

Table 5.1: FT4X Modbus Registers (cont'd)

Modbus Register	Data Type	Description	Units
40253**	16-bit int	CTC Input [0=none, 1=Reset Total]	
40254**	16-bit int	Pulse Output Select [0=none, 1=Frequency, 2=Hiflo Alarm, 3=Loflo Alarm, 4=Hitemp Alarm, 5=Lotemp Alarm, 6=SYS Alarm]	
40255**	32-bit float LSW	Freq Out: Max Frequency	Hz
40256**	32-bit float MSW		
40257**	32-bit float LSW	Freq Out: Max Flow	User selected
40258**	32-bit float MSW		
40259**	32-bit float LSW	Freq Out: Pulse/Unit	Pulses
40260**	32-bit float MSW		
40261**	32-bit float LSW	Freq Out: Unit/Pulse	User selected
40262**	32-bit float MSW		
40263**	16-bit int	Event Log Record Select [0-5000]	
40264**	2 Ascii Bytes	EVENT_LOG [0,1]	
40265**	2 Ascii Bytes	EVENT_LOG [2,3]	
40266**	2 Ascii Bytes	EVENT_LOG [4,5]	
40267**	2 Ascii Bytes	EVENT_LOG [6,7]	
40268**	2 Ascii Bytes	EVENT_LOG [8,9]	
40269**	2 Ascii Bytes	EVENT_LOG [10,11]	
40270**	2 Ascii Bytes	EVENT_LOG [12,13]	
40271**	2 Ascii Bytes	EVENT_LOG [14,15]	
40272**	2 Ascii Bytes	EVENT_LOG [16,17]	
40273**	2 Ascii Bytes	EVENT_LOG [18,19]	
40274**	2 Ascii Bytes	EVENT_LOG [20,21]	
40275**	2 Ascii Bytes	EVENT_LOG [22,23]	
40276**	2 Ascii Bytes	EVENT_LOG [24,25]	
40277**	2 Ascii Bytes	EVENT_LOG [26,27]	
40278**	2 Ascii Bytes	EVENT_LOG [28,29]	
40279**	2 Ascii Bytes	EVENT_LOG [30,31]	
40280**	2 Ascii Bytes	EVENT_LOG [32,33]	
40281**	2 Ascii Bytes	EVENT_LOG [34,35]	
40282**	2 Ascii Bytes	EVENT_LOG [36,37]	
40283**	2 Ascii Bytes	EVENT_LOG [38,39]	
40284**	32-bit int LSW	BLM Log Record Select [1-412876]	
40285**	32-bit int MSW		
40286**	32-bit int LSW	BLM Log Current Record Timestamp	Seconds since Jan 1 2000
40287**	32-bit int MSW		
40288**	16-bit int	BLM Log Current Record Type	
40289**	32-bit float LSW	BLM Log Current Record Flow	
40290**	32-bit float MSW		

Table 5.1: FT4X Modbus Registers (cont'd)

Modbus Register	Data Type	Description	Units
40291**	32-bit float LSW	BLM Log Current Record Temp	
40292**	32-bit float MSW		
40293**	32-bit float LSW	BLM Log Current Record Daily Total	
40294**	32-bit float MSW		
40295**	16-bit int	Daily Totals Log Record Select [0-39]	
40296**	32-bit int	Daily Totals Log Current Record Timestamp	Seconds since Jan 1 2000
40297**	32-bit int		
40298**	32-bit float LSW	Daily Totals Log Current Record Flow Total	User selected
40299**	32-bit float MSW		
40300**	16-bit int	Daily Totals Log Current Record Flow Total Unit Code	

*These registers are only available on FT4X firmware v8.3 or later.

**These registers are only available on FT4X firmware v9.2 or later.

NOTES!

- In Least Significant Word (LSW) and Most Significant Word (MSW), “word” is one 16-bit Modbus register. A 32-bit float or 32-bit integer is stored in a pair of Modbus registers. When a register is designated as “32-bit int LSW”, it means bits 0-15 of the variable are in that register. A register designated as MSW has bits 16-31 of the variable. For instance, the flow total can be read as a 32-bit integer from registers 40003 (LSW) and 40004 (MSW). If the flow total is 0x12345678, then register 40003 will hold 0x5678, and register 40004 will hold 0x1234. See the layout of a 32-bit floating point value on p. 87.
- 32-bit floating point values are defined by the IEEE 754 standard: https://ieeexplore.ieee.org/document/8766229
- Refer to Wikipedia: https://en.wikipedia.org/wiki/Single-precision_floating-point_format

Table 5.2: Status Bits Definitions for Modbus Address 40016

Bit	Definition	Comment
0	Power up indication	Cleared when out of the power up sequence
1	Flow rate reached high limit threshold	Set limit to zero to disable
2	Flow rate reached low limit threshold	Set limit to zero to disable
3	Temperature reached high limit threshold	Set limit to zero to disable
4	Temperature reached low limit threshold	Set limit to zero to disable
5	Sensor reading is out of range	Check sensor wiring
6	Gas mix error	Gas mix must total 100%
7	Incorrect Settings	Check settings
8	In simulation mode	Set simulation value to 0 to disable
9	Pulse/alarm output is out of range	Check pulse/alarm output settings
10	Analog CH1 4-20mA is out of range	Check analog output settings
11	Analog CH2 4-20mA is out of range	Check analog output settings
12	Not used	Not used
13	Not used	Not used
14	CRC error	Check parameters and reset CRC
15	Error in Total	Reset total to clear alarm

Table 5.3: Status 2 Bits Definitions for Modbus Address 40017

Bit	Definition	Comment
0	Pulse hardware	
1	Busy	
2	HART hardware	
3	FT4X	
4	CAL-V in process	
5	CAL-V fail	
6	CAL-V aborted	
7	CAL-V warning	

Using Modbus to Program Gas-SelectX®

Modbus can be used to access and program gases/gas mixes in the Gas-SelectX® feature available on the model FT4X.

Selecting FT4X Gases and Gas Mixes

Modbus register 40057 is used to set the gas type, which may be a pure gas (plus NAESB natural gas composition), custom gas mix, or custom oil & gas mix. Register 40057 will read zero, and register 40056 will read the gas selection that was chosen. Writing to register 40056 will produce an error response. See the Gas Selection Codes table for the values to write.

Table 5.4: Gas Selection Codes

Selection Code	Gas
0	Methane
1	CO2 (Carbon Dioxide)
2	Nitrogen
3	Air
4	Natural Gas
5	Argon
6	Propane
7	Helium
8	Oxygen
9	Reserved
10	Butane
11	Hydrogen

Selection Code	Gas
12	Iso Butane
13	Ethane
14	Pentane
15	Hexane
16	Heptane
17	Octane
18	Nonanes
19	Ethylene
20	Propylene
250	Gas Mix (must set percentages)
251	Oil & Gas mix

NOTE! Natural gas is defined as NAESB typical mixture of 94.9% Methane, 2.5% Ethane, 1.6% Nitrogen, 0.7% CO2, 0.3% Propane.

Setting Mix Percentages

First set the gas select code to Mixed Gas (250) or Oil & Gas mix (251). Next, go through each gas relevant to the mix type and set their percentage to the desired 32 bit floating point value - this value is split in two 16 bit registers. Ensure that all gases total up to 100%. Do not write a custom gas percent when the gas select code is set to a pure gas.

Table 5.5: FT4X Modbus Holding Registers for Gas-SelectX®

Modbus Register	Data Type	Description	Units
40056	16-bit int	Gas type selection	See Table 5.4 of gas selection codes for Modbus
40057	16-bit int	Gas type selection	
40058	32-bit float LSW	Methane (C1) percentage	Percent (31.4 = 31.4%)
40059	32-bit float MSW		
40060	32-bit float LSW	Carbon Dioxide percentage	Percent (31.4 = 31.4%)
40061	32-bit float MSW		
40062	32-bit float LSW	Nitrogen percentage	Percent (31.4 = 31.4%)
40063	32-bit float MSW		
40064	32-bit float LSW	Air percentage	Percent (31.4 = 31.4%)
40065	32-bit float MSW		

Table 5.5: FT4X Modbus Holding Registers for Gas-SelectX® (cont'd)

Modbus Register	Data Type	Description	Units
40066	32-bit float LSW	Argon percentage	Percent (31.4 = 31.4%)
40067	32-bit float MSW		
40068	32-bit float LSW	Propane percentage	Percent (31.4 = 31.4%)
40069	32-bit float MSW		
40070	32-bit float LSW	Helium percentage	Percent (31.4 = 31.4%)
40071	32-bit float MSW		
40072	32-bit float LSW	Oxygen percentage	Percent (31.4 = 31.4%)
40073	32-bit float MSW		
40074	32-bit float LSW	n-Butane percentage	Percent (31.4 = 31.4%)
40075	32-bit float MSW		
40076	32-bit float LSW	Hydrogen percentage	Percent (31.4 = 31.4%)
40077	32-bit float MSW		
40078	32-bit float LSW	i-Butane percentage	Percent (31.4 = 31.4%)
40079	32-bit float MSW		
40080	32-bit float LSW	Ethane percentage	Percent (31.4 = 31.4%)
40081	32-bit float MSW		
40082	32-bit float LSW	Pentane percentage	Percent (31.4 = 31.4%)
40083	32-bit float MSW		
40084	32-bit float LSW	Hexane percentage	Percent (31.4 = 31.4%)
40085	32-bit float MSW		
40086	32-bit float LSW	Heptane percentage	Percent (31.4 = 31.4%)
40087	32-bit float MSW		
40088	32-bit float LSW	Octane percentage	Percent (31.4 = 31.4%)
40089	32-bit float MSW		
40090	32-bit float LSW	Nonane percentage	Percent (31.4 = 31.4%)
40091	32-bit float MSW		
40092	32-bit float LSW	Ethylene percentage	Percent (31.4 = 31.4%)
40093	32-bit float MSW		
40094	32-bit float LSW	Propylene percentage	Percent (31.4 = 31.4%)
40095	32-bit float MSW		
40096 - 40097		Reserved	
40098*	32-bit float LSW	Ammonia percentage	Percent (31.4 = 31.4%)
40099*	32-bit float MSW		
40100*	32-bit float LSW	Chlorine percentage	Percent (31.4 = 31.4%)
40101*	32-bit float MSW		
40102*	32-bit float LSW	CO percentage	Percent (31.4 = 31.4%)
40103*	32-bit float MSW		
40104*	32-bit float LSW	Decane percentage	Percent (31.4 = 31.4%)
40105*	32-bit float MSW		

Table 5.5: FT4X Modbus Holding Registers for Gas-SelectX® (cont'd)

Modbus Register	Data Type	Description	Units
40106*	32-bit float LSW	Ethanol percentage	Percent (31.4 = 31.4%)
40107*	32-bit float MSW		
40108*	32-bit float LSW	H2S percentage	Percent (31.4 = 31.4%)
40109*	32-bit float MSW		
40110*	32-bit float LSW	Isopentane percentage	Percent (31.4 = 31.4%)
40111*	32-bit float MSW		
40112*	32-bit float LSW	Methanol percentage	Percent (31.4 = 31.4%)
40113*	32-bit float MSW		
40114*	32-bit float LSW	N2O percentage	Percent (31.4 = 31.4%)
40115*	32-bit float MSW		
40116*	32-bit float LSW	R125 percentage	Percent (31.4 = 31.4%)
40117*	32-bit float MSW		
40118*	32-bit float LSW	R134a percentage	Percent (31.4 = 31.4%)
40119*	32-bit float MSW		
40120*	32-bit float LSW	R143a percentage	Percent (31.4 = 31.4%)
40121*	32-bit float MSW		
40122*	32-bit float LSW	R22 percentage	Percent (31.4 = 31.4%)
40123*	32-bit float MSW		
40124*	32-bit float LSW	R32 percentage	Percent (31.4 = 31.4%)
40125*	32-bit float MSW		
40126*	32-bit float LSW	SF6 percentage	Percent (31.4 = 31.4%)
40127*	32-bit float MSW		
40128*	32-bit float LSW	SO2 percentage	Percent (31.4 = 31.4%)
40129*	32-bit float MSW		
40130*	32-bit float LSW	Water percentage	Percent (31.4 = 31.4%)
40131*	32-bit float MSW		
40132*	32-bit float LSW	Acetone percentage	Percent (31.4 = 31.4%)
40133*	32-bit float MSW		
40134**	32-bit float LSW	Benzene percentage	Percent (31.4 = 31.4%)
40135**	32-bit float MSW		
40136**	32-bit float LSW	1 Butyne percentage	Percent (31.4 = 31.4%)
40137**	32-bit float MSW		
40138**	32-bit float LSW	Propadiene percentage	Percent (31.4 = 31.4%)
40139**	32-bit float MSW		
40140**	32-bit float LSW	Ozone percentage	Percent (31.4 = 31.4%)
40141**	32-bit float MSW		
40142 to 40195		Reserved	
40196**	16-bit unsigned int	Gas Mix Ready [0=Not Ready, 1=Ready]	

*These registers are only available on FT4X firmware v10.0 or later.
**These registers are only available on FT4X firmware v10.1 or later.

Scope - HART Communication
The Fox Thermal model FT4X transmitter complies with HART Protocol Revision 7.1. This section of the manual specifies all the device-specific features and documents HART Protocol implementation details (e.g., the Engineering Unit Codes supported). The functionality of this Field Device is described sufficiently to allow its proper application in a process and its complete support in HART-capable Host Applications.

Purpose
This specification provides a complete description of this Field Device from a HART Communication perspective. The specification is designed to be a technical reference for HART capable Host Application Developers, System Integrators and knowledgeable End Users. It also provides functional specifications (e.g., commands and performance requirements) used during development, maintenance and testing. This document assumes the reader is familiar with HART Protocol requirements and terminology.

References
HART Communication Protocol Specification. HCF_SPEC-12.

Device Identification

Manufacturer Name:	Fox Thermal Instruments	**Model Name:**	FT4X
Manufacture ID Code:	24635	**Device Type Code:**	63784 (F982 Hex)
HART Protocol Revision:	7.1	**Device Revision:**	1
No. of Device Variables:	None		
Physical Layers Supported:	FSK		
Physical Device Category:	Transmitter, DC-isolated Bus Device		

Product Overview
The FT4X HART communication option can be monitored and configured using a HART master device or a hand-held communicator.

Process Flow Rate 4-20mA Analog Output
The 4-20mA output of the FT4X HART represents the process flow rate measurement, linearized and scaled according to the configured range of the instrument. This output corresponds to the Primary Variable. HART Communication is supported on this loop.

The 4-20mA output of the FT4X should be configured for flow rate when using HART. If the 4-20mA output is set to report temperature, HART communication will report the 4-20mA value for temperature rather than flow.

HART Indicators
Green LED indicator LP3 cycles on and off to indicate that the FT4X is operating. Orange LED indicator LP2 blinks when HART signals are received and Yellow LP1 blinks when HART signals are transmitted. The LEDs are located behind the display panel.

The orange LED indicator LP2 will be on continuously when HART communication is enabled and the 4-20mA wiring is not connected.

FT4X HART Communication Setup
HART communication must be selected in the FT4X Serial Communication menu for HART communication to operate. When this communication parameter is changed, power to the FT4X must be cycled for it to take effect.

Communication Protocol and Parameters
To program the communication parameters, press **I/O (F1)** key from the Main Menu.

```
        MAIN MENU
I/O     FLO     DSP     EXIT
```

F1 F2 F3 F4

This is the Main Menu for the programming mode. To exit the programming mode, press **EXIT (F4)** repeatedly until "Normal Mode" is seen briefly. Choose **I/O (F1)** to access the communication output.

```
        SET I/O
COM     PUL     420     EXIT
```

F1 F2 F3 F4

Then press **COM (F1)** to select communication parameters.

Set Bus protocol for HART:

```
Comm=HART
NXT                     OK
```

F1 F2 F3 F4

Press **NXT (F1)** until HART is selected as shown and then press **OK (F4)** to accept the setting.

NOTE! Power cycle is required for the new settings to take effect.

Dynamic Variables
Four Dynamic Variables are implemented.

Variable	Meaning	Units
PV	Flow Rate	In Selected Units
SV	Total	In Selected Units
TV	Temperature	In Selected Units
QV	Elapsed Time	In Hours

Status Information
Device Status
Bit 4 ("More Status Available") is set when any failure is detected. Command #48 provides additional detail.

Extended Device Status
This bit is set if a sensor error is detected. "Device Variable Alert" is set if the Primary Variable (PV) is out of limit.

Additional Device Status (Command 48)
Command #48 returns 2 Device-Specific Status bytes of data, with the following status information: These bits are set when an alarm or error condition is present. The bit automatically clears when the condition returns to its normal state.

Byte	Bit	Meaning	Class
0	0	Power Up Indication	Status
	1	High Flow Limit Alarm	Alarm
	2	Low Flow Limit Alarm	Alarm
	3	High Temperature Limit Alarm	Alarm
	4	Low Temperature Limit Alarm	Alarm
	5	Sensor out of range	Error
	6	Velocity out of range	Error
	7	Check Parameter Settings	Error

1	0	In Simulation Mode	Alarm
	1	Frequency output out of range	Alarm
	2	CH 1 4-20mA out of range	Alarm
	3	CH 2 4-20mA out of range	Alarm
	4	Busy	Alarm
	5	Bridge shutdown	Error
	6	CRC database error	Error
	7	Error with Total	Error

Common-Practice Commands, Supported Commands
The following common-practice commands are implemented:

34 Write Primary Variable (PV) Damping Value
35 Write PV Range Value
36 Set PV Upper Range Value
37 Set PV Lower Range Value
38 Reset "Configuration Changed" Flag
40 Enter/Exit Fixed Current Mode
44 Write PV Units
45 Trim Loop Minimum
46 Trim Loop Maximum
48 Read Additional Device Status (Command #48 returns 2 bytes of data)
59 Write Number of Response Preambles

Common-Practice Commands, Unsupported Commands

Burst Mode - This device does not support Burst Mode.
Catch Device Variable - This device does not support Catch Device Variable.
Device-Specific Commands - No Device-Specific commands are implemented.

Modes
Fixed current mode is implemented, using Command 40. This mode is cleared by power loss or reset.

Damping
Damping is standard, affecting only the PV and the loop current signal.

Capability Checklist

Manufacturer, model	Fox Thermal Instruments, FT4X
Device Type	Transmitter
HART revision	7.1
Device Description available	No
Number and type of sensors	1
Number and type of actuators	0
Number and type of host side signals	1 : 4-20mA analog
Number of Device Variables	0
Number of Dynamic Variables	4
Mappable Dynamic Variables	No
Number of common-practice commands	17
Number of device-specific commands	0
Bits of additional device status	8
Alternative operating modes	No
Burst mode	No
Write-protection	Yes

GB

PRECAUTIONS

WARNING! BEFORE ATTEMPTING ANY MAINTENANCE, TAKE THE NECESSARY SAFETY PRECAUTIONS BEFORE REMOVING THE PROBE FROM THE DUCT (EXAMPLE: PURGE LINES OF TOXIC AND/OR EXPLOSIVE GAS, DEPRESSURIZE, ETC...).

WARNING! EXPLOSION HAZARD. DO NOT REMOVE OR REPLACE COMPONENTS OR FUSES UNLESS POWER HAS BEEN SWITCHED OFF WHEN A FLAMMABLE OR COMBUSTIBLE ATMOSPHERE IS PRESENT.

WARNING! EXPLOSION HAZARD. DO NOT DISCONNECT EQUIPMENT WHEN A FLAMMABLE OR COMBUSTIBLE ATMOSPHERE IS PRESENT.

WARNING! TURN OFF INPUT POWER BEFORE REMOVING OR INSTALLING A CIRCUIT BOARD ASSEMBLY FROM THE ENCLOSURE.

Access to Electronics

Accessing electronics is not normally required for maintenance purposes. If a loose connection is suspected, unscrew the rear cap of the meter to access the wiring terminations.

CAUTION! BE SURE POWER TO METER IS SWITCHED OFF BEFORE ATTEMPTING TO ACCESS ELECTRONICS. If there is a problem and a loose connection is not found, please contact Fox Thermal Customer Service for technical assistance at (831) 384-4300.

ES

PRECAUCIONES

¡ADVERTENCIA! ANTES DE INTENTAR CUALQUIER MANTENIMIENTO, TOME LAS PRECAUCIONES DE SEGURIDAD NECESARIAS ANTES QUE RETIRAR LA SONDA DEL DUCTO (EJEMPLO: PURGUE LAS LÍNEAS DE GASES TÓXICOS Y/O EXPLOSIVOS, DESPRESURICE, ETC...).

¡ADVERTENCIA! PELIGRO DE EXPLOSIÓN. NO RETIRE O REEMPLACE COMPONENTES O FUSIBLES A MENOS QUE LA ENERGÍA HAYA SIDO DESCONECTADA SIEMPRE QUE ESTÉ PRESENTE UNA ATMÓSFERA INFLAMMABLE O COMBUSTIBLE.

¡ADVERTENCIA! PELIGRO DE EXPLOSIÓN. NO DESCONECTE NINGÚN EQUIPO CUANDO UNA ATMÓSFERA INFLAMABLE O COMBUSTIBLE ESTÉ PRESENTE PRONTO.

¡ADVERTENCIA! DESCONECTE LA ENERGÍA DE ALIMENTACIÓN ANTES DE REMOVER O INSTALAR UN ENSAMBLE DE TARJETA DE CIRCUITO DEL GABINETE.

Acceso a la Electrónica

Normalmente no se requiere tener acceso a la electrónica para propósitos de mantenimiento. Si se sospecha de una conexión suelta, desatornille la tapa posterior de la caja del medidor para tener acceso a las terminales

PRECAUCIÓN: ASEGÚRESE QUE LA ALIMENTACIÓN DEL MEDIDOR ESTE DESCONECTADA ANTES DE INTENTAR EL ACCESO A LA ELECTRÓNICA. Si existe algún problema y no se encuentra ninguna conexión suelta, por favor póngase en contacto con el Servicio al Cliente de Fox para asistencia técnica al número (831) 384-4300.

FR **PRÉCAUTIONS**

AVERTISSEMENT ! AVANT TOUTE TENTATIVE DE MAINTENANCE, OBSERVER LES CONSIGNES DE SECURITE NECESSAIRES AVANT DE RETIRER LA SONDE DE LA CONDUITE (PAR EXEMPLE, PURGER LES LIGNES DES GAZ EXPLOSIFS/TOXIQUES QU'ELLES POURRAIENT CONTENIR, DEPRESSURISER LE CONTENEUR, ETC.).

AVERTISSEMENT ! RISQUE D'EXPLOSION. NE PAS RETIRER NI REMPLACER DES COMPOSANTS OU DES FUSIBLES SI LA SOURCE D'ALIMENTATION N'A PAS ETE DEBRANCHEE DANS UNE ATMOSPHERE INFLAMMABLE OU COMBUSTIBLE.

AVERTISSEMENT ! RISQUE D'EXPLOSION. NE PAS DEBRANCHER UN EQUIPEMENT DANS UNE AMBIANCE COMBUSTIBLE OU INFLAMMABLE.

AVERTISSEMENT ! COUPER L'ALIMENTATION AVANT DE RETIRER OU D'INSTALLER UN ENSEMBLE DE CARTE DE CIRCUITS IMPRIMES DU BOITIER.

Accès aux composants électroniques

L'accès aux composants électroniques n'est généralement pas nécessaire dans le cadre de la maintenance. Si une connexion lâche est suspectée, dévisser le capuchon d'extrémité arrière du boîtier du compteur pour accéder aux terminaisons

ATTENTION : S'ASSURER QUE L'ALIMENTATION DU COMPTEUR EST COUPEE AVANT D'ACCER AUX COMPOSANTS ELECTRONIQUES. En cas de problème et qu'aucune connexion lâche n'est détectée, veuillez contacter le service client de Fox pour obtenir une assistance technique au (831) 384-4300.

DE **VORSICHTSMASSNAHMEN**

ACHTUNG! BITTE ERGREIFEN SIE DIE ERFORDERLICHEN SICHERHEITSMAßNAHMEN, BEVOR SIE IRGENDWELCHE WARTUNGSARBEITEN DURCHFÜHREN UND DIE MESSSONDE AUS DEM ROHR ENTFERNEN (BEISPIEL: LEITUNGEN ZUR ENTFERNUNG VON GIFTIGEN UND/ODER EXPLOSIVEN GASEN REINIGEN, DRUCK SENKEN, USW.).

ACHTUNG! EXPLOSIONSGEFAHR. KOMPONENTEN ODER SICHERUNGEN BITTE ERST DANN ENTFERNEN ODER AUSTAUSCHEN, WENN DER STROM GETRENNT WURDE, FALLS EINE ENTZÜNDLICHE ODER BRENNBARE ATMOSPHÄRE VORHANDEN IST.

ACHTUNG! EXPLOSIONSGEFAHR. GERÄT NICHT VOM STROM TRENNEN, WENN EINE ENTZÜNDLICHE ODER BRENNBARE ATMOSPHÄRE VORHANDEN IST.

ACHTUNG! EINGANGSLEISTUNG AUSSCHALTEN, BEVOR LEITERPLATTENBAUGRUPPEN AUS DEM GEHÄUSE AUSGEBAUT ODER IN DIESES EINGEBAUT WERDEN.

Zugriff auf die Elektronik

Der Zugriff auf die Elektronik ist zu Wartungszwecken normalerweise nicht erforderlich. Falls eine lose Verbindung vermutet wird, schrauben Sie die hintere Endkappe des Messgerätgehäuses ab, um auf die Anschlüsse zugreifen zu können.

VORSICHT: STELLEN SIE SICHER, DASS DER STROM AN DAS MESSGERÄT AUSGESCHALTET IST, BEVOR SIE VERSUCHEN, AUF DIE ELEKTRONIK ZUZUGREIFEN. Falls Probleme auftreten und keine lose Verbindung gefunden werden kann, wenden Sie sich bitte zwecks technischer Unterstützung an den Fox-Kundendienst unter der Nummer (831) 384-4300.

Broken or Damaged Probe
If the sensor is broken or damaged, the probe and electronics must be returned to the factory. A new sensor will be installed and calibrated. Refer to "Returning Your Meter" on p. 129.

Flow Calibration and Calibration Validation
To ensure high accuracy of your model FT4X Flow Meter, Fox Thermal provides a full NIST traceable calibration. It is recommended that the meter's accuracy be checked annually by performing the CAL-V™ Calibration Validation test.

Fuse Replacement

WARNING! Turn input power OFF before removing or installing a fuse. Use only recommended fuse replacements.

Verify the fuse is defective by measuring it with an ohm meter (Two replacement fuses are provided with each unit). Replacement fuse is Littelfuse part number 0454.750MR. The 100 to 240VAC power option FT4X does not have a replaceable fuse.

To replace the fuse:
The fuse F1 is located near the power terminal block and can be removed by using tweezers or needle-nose pliers.

Sensor Cleaning
The sensor is insensitive to small amounts of residue, but continued use in dirty environments will require periodic cleaning. To inspect the sensor, remove power from electronics and remove the unit from the pipe or duct, exposing the sensor elements. If they are visibly dirty, clean them with water or alcohol (ethanol) using an appropriate brush until they appear clean again. Even though the sensor elements are rugged, avoid touching them with any solid object and use a light touch while cleaning them.

Instructions for Removing and Inserting the Meter from a Pressurized Pipe using the Retractor

WARNING! Possible injury or damage to equipment may occur if the retractor is not used correctly. Please read the following instructions carefully prior to using the retractor.

CAUTION! Never remove the restraint cable without first closing the Ball Valve and bleeding off pressure.

WARNING! When working with the retractor, do not stand or position any part of your body in the path of the flow meter. An injury may occur if the probe is forced outward by system pressure.

How to Remove the Meter from the Retractor (System Pressurized)

Step 1 - Remove the Probe from the Flow Stream

1. Disconnect power from the meter.

NOTE! At 150 psig maximum system pressure, the standard 3/4" probe will have approximately 66 lbs. of force and the optional 1/2" probe will have approximately 30 lbs. of force pushing it out of the retractor.

2. System pressure may force the probe out of the retractor when the compression nut is loosened. Hold the flow meter to counteract the force of the system pressure, and carefully loosen and unscrew the compression nut.
3. While supporting the meter, slowly slide the probe out of the retractor until the restraint cable is tight.
4. Close the ball valve all the way.

CAUTION! <u>At this point there is still pressure inside of the retractor.</u>

Figure 6.1

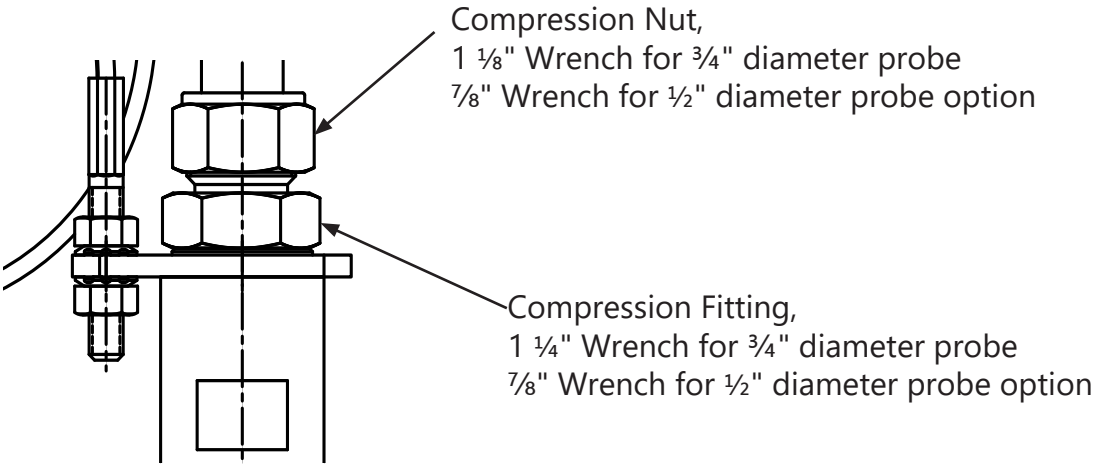

Step 2 - Remove the Probe from the Retractor Body

5. After removing the probe from the flow stream (#1-4 on previous page), slowly loosen the compression fitting (see figure 6.2), until the pressure in the retractor is relieved.
6. Retighten the compression fitting.
7. Remove the Collar Clamp by using a 3/16" Hex Key.
8. Carefully slide the probe out of the retractor while supporting the meter.

Figure 6.2

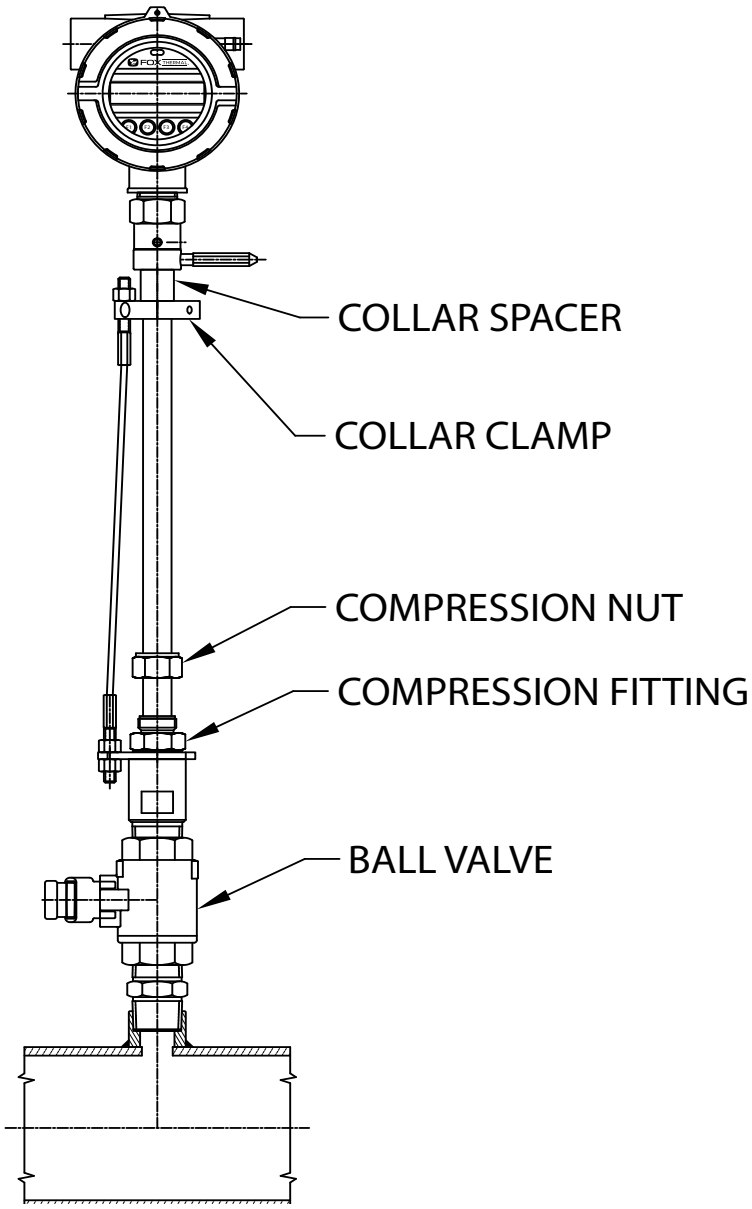

How to Insert the Probe into the Flow Stream (Valve closed, System Pressurized)

1. Carefully, slide the probe into the retractor.
2. Install the collar clamp just below the collar spacer, and tighten it in place on the probe. Slide the probe back out of the retractor until the cable is straight and taut.

Figure 6.3

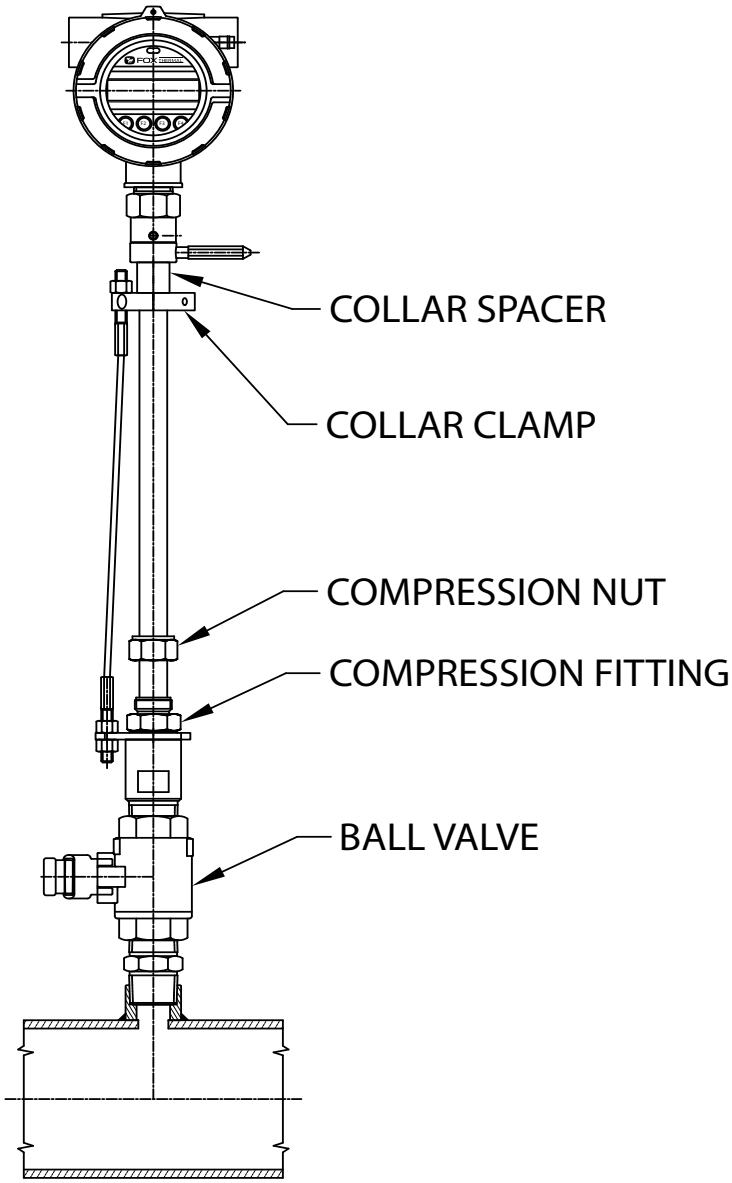

NOTE! At a maximum system pressure of 150 psig, the force required to push the probe in place to tighten the compression Nut will be approximately 66 lbs.

3. Slowly open the ball valve to the full open position. Push the meter and probe into the pipe, then hand tighten the compression nut onto the compression fitting.
4. Verify that the probe is aligned with the center line of the pipe, and pointed in the direction of flow.

5. Secure the probe in place by tightening the compression nut with a wrench and a wrench on the compression fitting. See p. 25 of the manual for detailed instructions to tighten the compression nut.
6. Power may now be applied to the meter.

Figure 6.4

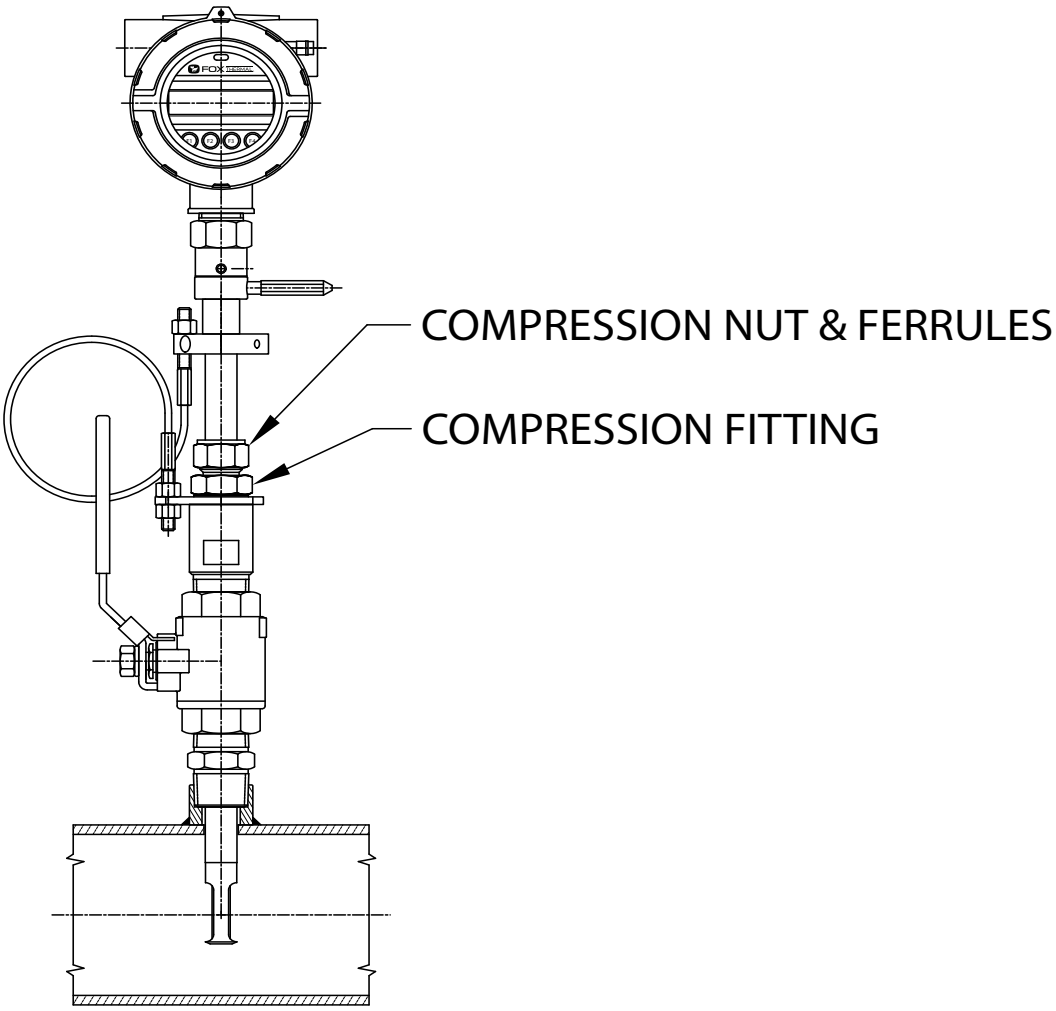

Installation Problems

The following is a summary listing of problems that may be encountered with the installation of the FT4X thermal mass flow meter.

1. *Improper wiring connections.*
   Refer to Figures 3.1 to 3.12 and "Wiring Precautions" in Wiring section (p. 33) for further guidance.
2. *Inadequate DC power source.*
   The FT4X requires 12 to 24VDC at to 6 Watts to operate. A 20 Watt power supply is recommended for powering the FT4X to ensure it operates properly under all temperature ventilation, and power on conditions. If the voltage supplied at the input terminals of the FT4X is not within the range of 10VDC to 30VDC, a variety of problems can occur including a dim display, inaccurate flow readings or faulty 4-20mA, pulse and communication interface. The 100 to 240VAC power option requires 85 to 264VAC to operate.
3. *Flow measurement seems inaccurate.*
   - Check to ensure that the flow meter is installed so that the Flow Direction Indicator is pointing in the direction of flow. Refer to Figure 2.8 (p. 27). If not, change orientation of meter.
   - Check that the insertion depth of the sensor/probe is correct. The end of the probe should be adjusted as per Figure 2.5 (p. 24).
   - Ensure that there are a minimum of fifteen diameters of straight pipe upstream of the sensor and ten diameters downstream. If complex flow disturbances are upstream of the sensor, extension of the straight pipe may be required to ensure accurate flow measurement. Contact Fox Thermal for assistance.
   - Ensure that the pipe inside diameter and gas composition settings in the meter matches data on the Fox Thermal Calibration Certificate. These settings are programmed into the flow meter through the front panel (see Flow Parameters, p. 64 and Gas Selection, p. 73).
4. *Erratic flow reading (especially a flow reading spiking high).*
   This may be a symptom of moisture in the flow stream. Fox Thermal flow meters are designed to work in relatively dry gas applications only, reference information on page 22. Contact Fox Thermal to discuss resolutions to this problem.
5. *Flow meter is not responding to flow.*
   - Check to ensure adequate power is supplied to the flow meter. If things appear to be correct, perform this functional test before calling Fox Thermal. Carefully remove the probe and sensor from the pipe. For those flow meters with a display - and if the display is reading zero - blow on the sensor to see if a response occurs. If nothing happens, take a damp rag or sponge and place it in contact with the sensor. A reading should occur. Contact Fox Thermal Customer Service with this information.
6. *Display and/or 4-20mA signal reading above zero flow when no flow is occurring in the pipe.*
   If the reading is less than 5% of full scale, it is likely this is a normal condition caused by convection flow created by the heated sensor. It does not mean that the zero of the instrument is improperly set. The Fox Thermal sensor is extremely sensitive to gas flow and can even read the small flow caused by convection. If this is an unacceptable condition, please contact Fox Thermal Customer Service for alternatives.

Troubleshooting

CAUTION! The electronics and sensor supplied by Fox Thermal are calibrated as a single precision mass flow meter. Interchanging sensors will decrease the accuracy of the flow meter. If you experience any problem with your model FT4X flow meter, call Fox Thermal Customer Service Department, Technical Assistance at (831) 384-4300.

Problem	Possible Cause(s)	Action(s)
Meter does not initialize	1. Malfunction in flow meter 2. Electromagnetic Interference (EMI)	1. Return flow meter to Fox Thermal for repair (Refer to p. 129 for shipping instructions) 2. Check meter power cycles. 3. Press and release F1 and F2 at the same time; the display will enter Engineering screens. 4. Press F1 to get to screen #23; record power cycle value. 5. Press F4 to return to normal operation; monitor meter until problem returns. 6. Return to screen #23 to see if power cycles have increased; microprocessor is resetting due to EMI electrical noise entering the meter. 7. Check Power input and output cables grounding and routing.
Flow measurement is erratic or fluctuating	1. Very turbulent flow 2. Sensor dirty 3. Sensor broken 4. Probe not mounted securely 5. Malfunction in flow meter 6. Meter installed incorrectly	1. Increase dampening (see filter settings in "Flow Parameters" on p. 64) 2. Clean sensor (Refer to Maintenance section, p. 104) 3. Return flow meter to Fox Thermal for repair (Refer to p. 129 for shipping instructions) 4. Remount probe (see Installation section, p. 21); must be mounted securely without vibration. If vibration persists, choose a new mounting location without vibration. 5. Return flow meter to Fox Thermal for repair (Refer to p. 129 for shipping instructions) 6. Re-install meter according to instructions (Refer to installation section, p. 21)

Problem	Possible Cause(s)	Action(s)
Display Error	1. Loose or damaged ribbon cable 2. Damaged electronics 3. Ambient temperature	1. Visual inspection. 2. Return the meter or display for repair. 3. Operate meter between -20 to 70°C
Flow measure-ment seems low	1. Probe not oriented properly 2. Sensor dirty	1. Orient probe per installation sections: Insertion (p. 27) 2. Clean sensor (p. 104)
Unit will not power-up	1. No power input or bad power supply 2. Bad fuse	1. Check for correct power supply voltage at TS1 on main board. 2. Check fuse (F1) located next to TS1 on main board. If fuse is OK and unit still won't power up, call Fox Thermal for additional assistance. The 100 to 240VAC power option FT4X does not have a replaceable fuse.

Troubleshooting CAL-V™

If the FT4X Meter fails a CAL-V™ Calibration Validation test, there are a few reasons that could be the cause:

1. Flow rate in the pipe:
   - Run the test again under a higher flow rate if possible.
2. The sensor may be dirty or damaged:
   - Visually inspect the meter for damage. If damage is found, meter may need to be serviced. Contact Fox Thermal Technical Assistance at 831-384-4300 for more information.
   - Try cleaning the sensor and try the test again under flow conditions.
3. If the meter fails again, contact Fox Thermal Technical Assistance at 831-384-4300 for more information.

Alarm Codes

Alarm Code	Reason	Action
13	Flow rate above high limits	Refer to the FLOW MENU 2 section on p. 65 of this Manual to verify limit is within range. Check ALM = HiFloAlm under PRM.
14	Flow rate below low limits	Refer to the FLOW MENU 2 section on p. 65 of this Manual to verify limit is within range. Check ALM = LoFloAlm under PRM.
15	Temperature above high limits	Refer to the FLOW MENU 2 section on p. 65 of this Manual to verify limit is within range. Check ALM=HiTempAlm under PRM.
16	Temperature below low limits	Refer to the FLOW MENU 2 section on p. 65 of this Manual to verify limit is within range. Check ALM = LoTempAlm
22	Sensor out of range	Check the CSV voltage in ENG menu of LOGS MENU 1, refer to page 15. It should be approximately 0.04 volts when FT4X is measuring no flow and up to 0.25 volts at high flow. Measure resistance of the sensor wires, the wires must be removed from FT4X terminal block, refer to page 33. Resistance from Red to White wires, approximately 9 ohms. Resistance from Blue to Yellow wires, approximately 109 ohms. If FT4X has remote sensor option, verify this wiring is correct, refer to page 46. Verify that parameters in FT4X are set correctly. If FT4X View is available, check parameter settings in Configuration page. If using FT4X front panel, check parameters in UNIT menu of FLOW MENU 1 and PRM menu of FLOW MENU 2, refer to pages 10-11.
23	Gas mix error	Gas mix must equal 100%. Refer to page 14.
24	Check settings	One or more internal settings are corrupted or out of spec. Contact Fox Thermal Service for instructions to verify settings.
25	Simulation mode	Meter is in Simulation Mode. Refer to the FLOW MENU 1 section on p. 66. Use the SIM Section under Diagnostics to return to normal operation.
26	Pulse/alarm output over range	Refer to the DIGITAL OUTPUT MENU on p. 9 of this Manual. Verify the Pulse/alarm Output settings are within limits.
32	4-20mA is out of range	Refer to the MAIN MENU on p. 8 of this Manual. Use the Set I/O section to verify range limits.
33	Temperature 4-20mA out of range	Refer to the MAIN MENU on p. 8 of this Manual. Use the Set I/O section to verify range limits.
34	Busy	Meter is recalculating new parameters.

Alarm Code	Reason	Action
36	Database CRC Error	Refer to the Reset CRC section on p. 68 of this manual. Verify the programmed values are verified and corrected before clearing the error. Contact Fox Thermal Service Department for possible causes.
38	CSV Volt Error	The CSV Voltage is out of the acceptable range. This may be a result of failed electronics, parameters, or sensor connections. Refer to action of Alarm Code 22.
39	VFLO Volt Error	The VFLO Voltage is out of the acceptable range. This may be a result of failed electronics, parameters, or sensor connections. Refer to action of Alarm Code 22.
40	TSV Volt Error	The TSV Voltage is out of the acceptable range. This may be a result of failed electronics, parameters, or sensor connections. Refer to action of Alarm Code 22.
41	VTEMP Volt Error	The VTEMP Voltage is out of the acceptable range. This may be a result of failed electronics, parameters, or sensor connections. Refer to action of Alarm Code 22.
42	Delta T Error	The Delta T error between the sensor elements is too large. This may be a result of failed electronics, parameters, or sensor connections. Refer to action of Alarm Code 22.
43	Invalid Board Calibration Values	The board calibration values do not match the values saved in the backup. This is the result of data corruption. The best course of action is to perform a "Restore Database" within the meter menus - this will restore the meter to its factory settings and calibrations.
46	TEMP Input Error	This may be a result of failed electronics, parameters, or sensor connections. Refer to action of Alarm Code 22. Focus on the Yellow and Blue wires.
47	TSV Input Error	This may be a result of failed electronics, parameters, or sensor connections. Refer to action of Alarm Code 22. Focus on the Yellow and Blue wires.
48	CSV Input Error	This may be a result of failed electronics, parameters, or sensor connections. Refer to action of Alarm Code 22. Focus on the Red and White wires.
49	FLO Input Error	This may be a result of failed electronics, parameters, or sensor connections. Refer to action of Alarm Code 22. Focus on the Red and White wires.
53	ADC Temp Below Spec	This is the result of low temperatures inside the meter enclosure. Be sure keep the meter within the specification.
54	ADC Temp Above Spec	This is the result of high temperatures inside the meter enclosure. Be sure keep the meter within the specification.
55	ADC NOREF	This is a result of failed electronics. Contact support for further assistance.

Performance Specs

Flow Accuracy:
- Air and Nitrogen (N2): ±1% of reading ±0.2% of full scale
- Other gases: ±1.5% of reading ±0.5% of full scale
- Accuracy specification applies to customer's selected flow range
- Maximum range: 15 to 60,000 SFPM (0.07 to 280 NMPS)
- Minimum range: 15 to 500 SFPM (0.07 to 2.4 NMPS)
- Typical straight, unobstructed pipe requirement
  - Insertion Meters: 15 diameters upstream; 10 downstream
  - Inline Meters: 8 diameters upstream; 4 downstream
  - Insertion Meters with FC20: 5 diameters upstream of FC20; 5 diameters downstream of FT4X

Gross Heating Value Uncertainty: ±0.01% of mass basis; ±1.0% on volume basis

Flow Repeatability: ±0.2% of full scale

Flow Response Time: 0.8 seconds (one time constant)

Temperature Accuracy: ±1° F (±0.6° C)

Calibration:
- Factory Calibration to NIST traceable standards
- CAL-V™: In-situ, operator-initiated calibration validation

Operating Specs

Gas-SelectX® Gas Selections:
- Pure gas menu, Gas Mix Menu, and Oil & Gas Mix Menu. See the Fox Thermal website for more information on availability of current gases.

Units of Measurement (field selectable):
- SCFM, SCFH, NM3/M, NM3/H, NM3/D, NLPS, NLPM, NLPH, MCFD, MSCFD, SCFD, MMSCFD, MMSCFM, SM3/D, SM3/H, SM3/M, LB/S, LB/M, LB/H, LB/D, KG/S, KG/M, KG/H, SLPM, MT/H

Gas Pressure (maximum at 100º F (38ºC)):
- Insertion meter: 740 psig (51.02 barg)
- 316 SS inline meter with NPT ends: 500 psig (34.5 barg)
- 316 SS inline meter with 150 lb. flanges: 230 psig (15.86 barg)
- 316 SS inline meter with 300 lb. flanges: 600 psig (41 barg)
- Carbon steel inline meter with NPT ends: 500 psig (34.5 barg)
- Carbon steel inline meter with 150 lb. flanges: 285 psig (19.65 barg)
- Carbon steel inline meter with 300 lb. flanges: 740 psig (51 barg)

Retractor Assembly: 150 psig (10.34 barg)

NOTE! Check with factory for higher pressure options.

NOTE! When teflon ferrule option ordered, gas pressure is 60psig (4.1 barg) maximum

NOTE! The EU Pressure Equipment Directive (PED) requires that the minimum ambient and fluid temperature rating for carbon steel flow bodies not be below -29°C.

Operating Specs (cont'd)

Temperature:
DDC-Sensor™: -40 to 250°F (-40 to 121°C)
Enclosure: -40 to 158°F (-40 to 70°C)*
Remote Sensor Enclosure: -40 to 158°F (-40 to 70°C)
***NOTE!** Display dims below -4˚F (-20˚C), function returns once temperature rises again.

Relative Humidity: 90% RH maximum; non-condensing
NOTE! Condensing liquids contacting the sensor can cause erratic flow indication.

Flow Velocity Range:
15 to 60,000 SFPM (0.07 to 280 NMPS)
Turndown: up to 1000:1; 100:1 typical

Maximum Flow Ranges for Insertion Flow Meters			
Pipe Diameter	**SCFM**	**MSCFD**	**NM^3/hr**
1.5" (40mm)	0-840	0-1,220	0-1,325
2" (50mm)	0-1,400	0-2,020	0-2,210
2.5" (63mm)	0-2,000	0-2,880	0-3,150
3" (80mm)	0-3,100	0-4,440	0-4,890
4" (100mm)	0-5,300	0-7,650	0-8,360
6" (150mm)	0-12,000	0-17,340	0-18,930
8" (200mm)	0-20,840	0-30,020	0-32,870
10" (250mm)	0-32,800	0-47,250	0-51,740
12" (300mm)	0-46,600	0-67,180	0-73,500

NOTE! To determine if the FT4X will operate accurately in other pipe sizes, divide the maximum flow rate by the pipe area. The application is acceptable if the resulting velocity is within the velocity range above. Check Fox Thermal website for velocity calculator.

Maximum Flow Ranges for Inline Flow Meters			
Size	**SCFM**	**MSCFD**	**NM^3/hr**
0.75"	0-220	0-320	0-350
1"	0-360	0-520	0-570
1.25"	0-625	0-900	0-990
1.5"	0-840	0-1,220	0-1,325
2"	0-1,400	0-2,020	0-2,210
2.5"	0-2,000	0-2,880	0-3,150
3"	0-3,100	0-4,440	0-4,890
4"	0-5,300	0-7,650	0-8,360
6"	0-12,000	0-17,340	0-18,930

NOTE! Standard conditions of air at 70°F and one atmosphere. Consult factory for other gases and for flow ranges above those listed. Inline meters above 5,000 SCFM (7,900 NM3/H) air may require third party calibration. Contact Fox Thermal.

Operating Specs (cont'd)

Input Power:

12 to 24VDC ⎓ , 6 Watts. Full Input Power Range: 10 to 30VDC (standard DC power).

• A 20 Watt or greater DC power supply is recommended to power the FT4X.

100 to 240VAC ∼ , 50-60Hz, 7 Watts. Full Input Power Range: 85 to 264VAC (AC power option).

Class I Equipment (Electrical Grounding Required for Safety).

Installation (Over-voltage) Category II for transient over-voltages.

Inputs/Outputs:

4-20mA Channel 1:

- Standard isolated 4-20mA output configured to indicate flow; fault indication per NAMUR NE43. HART serial communication option.

  The 4-20mA load resistance must be 125 ohms or less when operating on 12 volt power and 600 ohms or less on 24 volt power.

4-20mA Channel 2:

- Standard isolated 4-20mA output configured to indicate either flow or temperature.

Pulse/Alarm:

- Isolated open collector output rated for 5 to 24VDC, 20mA maximum load, 0 to 100Hz (the pulse output can be configured to either transmit a 0 to 100Hz signal proportional to flow rate or an on/off alarm).

Remote Switch Input:

- Can be configured to reset the flow totalizer and elapsed time.

Serial Communication

- Isolated Modbus RTU (RS485) option
- Isolated HART communication option

USB Communication:

- Isolated USB 2.0 for interfacing with a laptop or computer is standard.
- FT4X View™: A free PC-based software tool that provides complete configuration, remote process monitoring, and data logging functions through USB communication.

4-20mA and Loop Verification:

Simulation mode used to align 4-20mA output with the input to customer's PLC/DCS.

Physical Specs

Probe diameter: ¾" (standard) or ½" (option)

Probe material: 316 stainless steel

Enclosure:

NEMA 4X (IP67), aluminum, ¾" FNPT conduit entries. Cabling to remote enclosure: 8-conductor, 18 AWG, twisted, shielded, 100 feet maximum.

Flow Meter Installation:

A standard compression fitting with 1" MNPT threads is provided with the ¾" standard FT4X probe to connect the probe to a customer supplied 1" branch outlet welded to the pipe. For ½" probe options, a ¾" compression fitting MNPT threads is supplied requiring a customer-supplied ¾" branch outlet welded to the pipe.

Agency Approvals

CE: Approved
EMC Directive; 2014/30/EU
Electrical Equipment for Measurement, Control and Lab Use: EN61326-1:2013
Low Voltage Directive (LVD): 2014/35/EU
Product Safety Testing: EN 61010-1: 2010
Pressure Equipment Directive: 2014/68/EU
Weld Testing: EN ISO 15614-1 and EN ISO 9606-1, ASME B31.3

FM (FM17US0061X) and FMc (FM17CA0032X):
Class I, Division 1, Groups B,C,D;
Class II, Division 1, Groups E,F,G;
Class III, Division 1; T6 or T4, Ta = - 40˚C to +70˚C;
Class 1, Zone 1, AEx/Ex db IIB + H2 T6 or T4 Gb; Ta= -20˚C to +70˚C; Type 4X, IP67

ATEX (FM17ATEX0015X):
II 2 G Ex db IIB + H2 T6 or T4 Gb Ta = - 20˚C to +70˚C; IP67
II 2 D Ex tb IIIC T85˚C or T135˚C Db Ta = - 20˚C to +70˚C; IP67

IECEx (IECEx FMG 17.0008X):
Ex db IIB + H2 T6 or T4 Gb Ta = - 20˚C to +70˚C; IP67
Ex tb IIIC T85˚C or T135˚C Db Ta = - 20˚C to +70˚C; IP67

ATEX and IECEx Standards:

EN 60079-0	EN 60079-31	IEC 60079-0	IEC 60079-31
EN 60079-1	EN 60529 +A1 +A2	IEC 60079-1	IEC 60529

Specific Conditions of Use:

1. The flameproof joints of the equipment are not intended to be repaired. Consult the manufacturer if dimensional information on the flameproof joints is necessary.
2. Refer to the manufacturer's instructions to reduce the potential of an electrostatic charging hazard on the equipment or enclosure.
3. The equipment temperature code ratings are dependent on the enclosure configuration model code (local or remote). Refer to the following table for specific temperature code markings.

Enclosure Model Code	Temperature Code Marking - Divisions (All)		Temperature Code Marking - Zones (Gas)		Temperature Code Marking - Zones (Dust)	
Enclosure (variable 'b')	Main Enclosure	Remote Enclosure	Main Enclosure	Remote Enclosure	Main Enclosure	Remote Enclosure
E1	T4	N/A	T4	N/A	T135°C	N/A
E2	T4	N/A	T4	N/A	T135°C	N/A
E3	T6	T4	T6	T4	T85°C	T135°C
E4	T6	T4	T6	T4	T85°C	T135°C

Fig. 7.1: Insertion Meter with Retractor Dimensions
Dimensions shown in inches (millimeters).

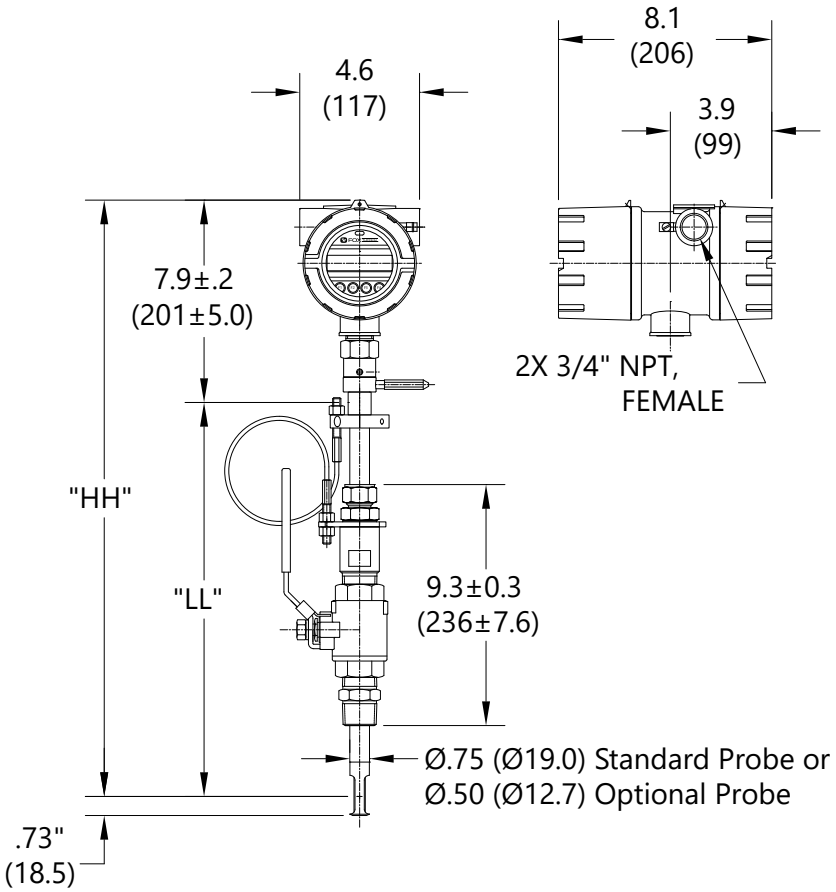

Table 7.1: Insertion Meter with 316 stainless steel probe

Probe Option	Probe Length	Dimension "LL" ± .10	Dimension "HH" ±.30
[model code]	[inches]	[inches / millimeters]	[inches / millimeters]
15R	15"	15.0" (381mm)	22.9" (582mm)
18R	18"	18.0" (457mm)	25.9" (658mm)
24R	24"	24.0" (610mm)	31.9" (810mm)
30R	30"	30.0" (762mm)	37.9" (963mm)
36R	36"	36.0" (914mm)	43.9" (1115mm)

Fig. 7.2: Remote Insertion Meter with Retractor Dimensions

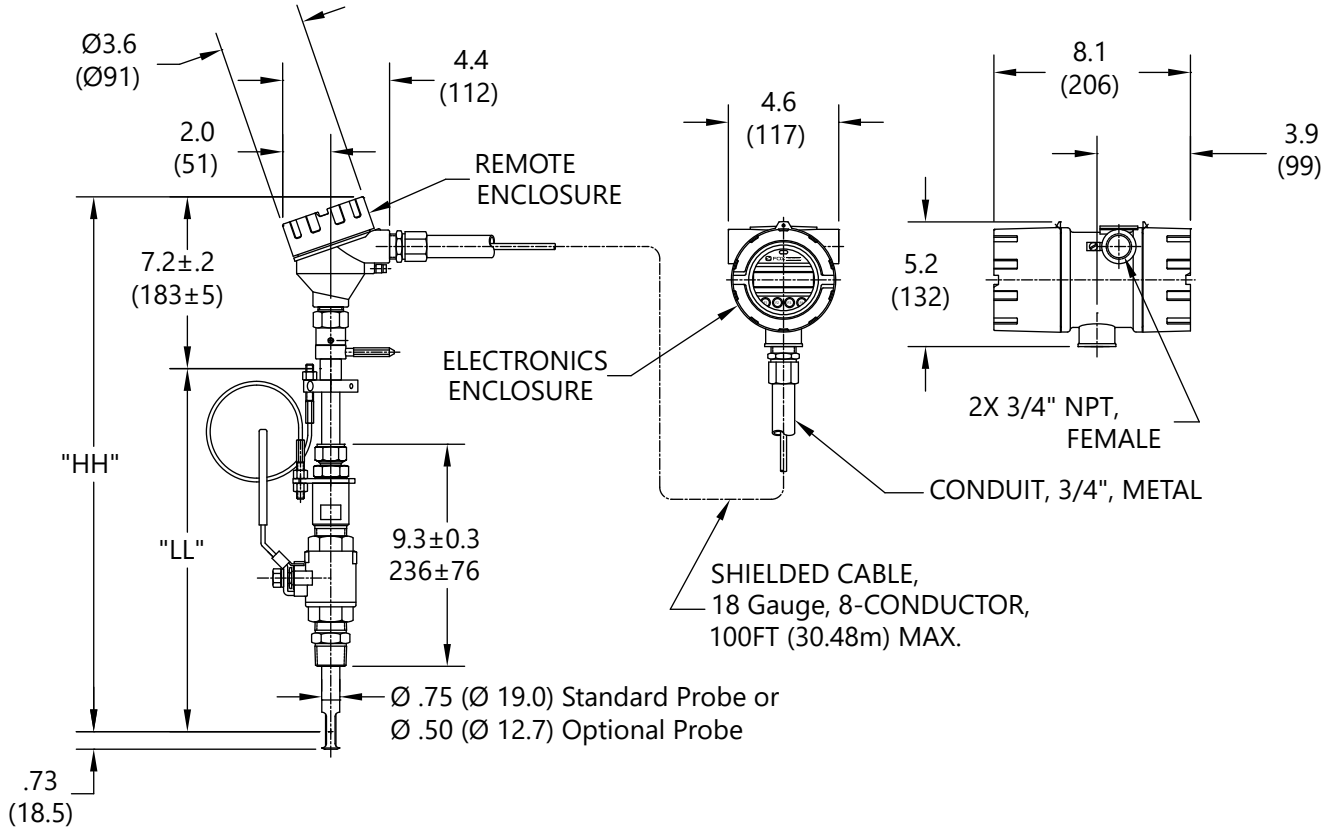

Table 7.2: Remote Insertion Meter with Retractor

Probe Option	Probe Length	Dimension "LL" ± .10	Dimension "HH" ±.30
[model code]	[inches]	[inches / millimeters]	[inches / millimeters]
15R	15"	15.0" (381mm)	22.2" (564mm)
18R	18"	18.0" (457mm)	25.2" (640mm)
24R	24"	24.0" (610mm)	31.2" (792mm)
30R	30"	30.0" (762mm)	37.2" (945mm)
36R	36"	36.0 " (914mm)	43.2" (1097mm)

Fig. 7.3: Remote Mounting Kit Dimensions

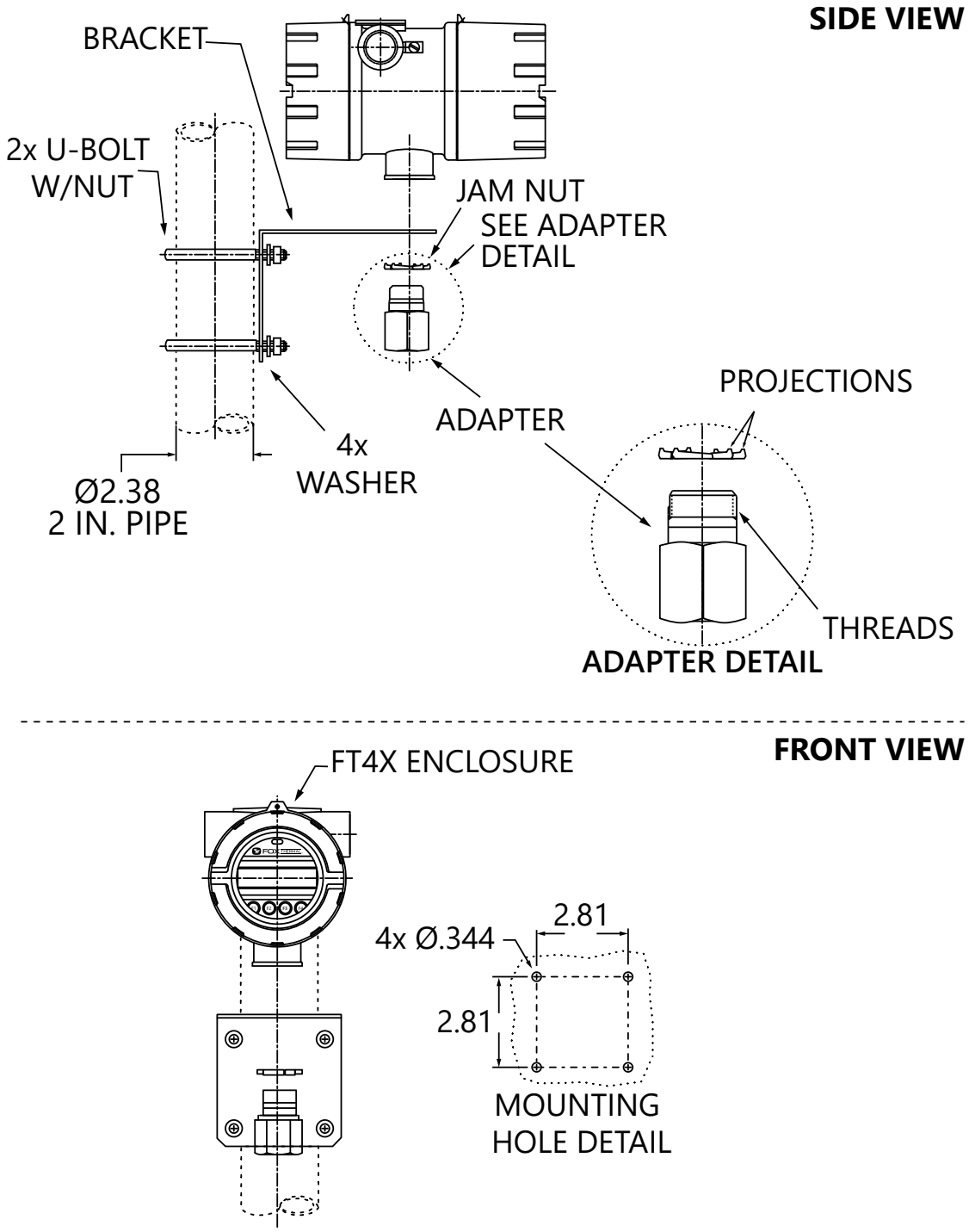

Fig. 7.4: Insertion Meter Dimensions

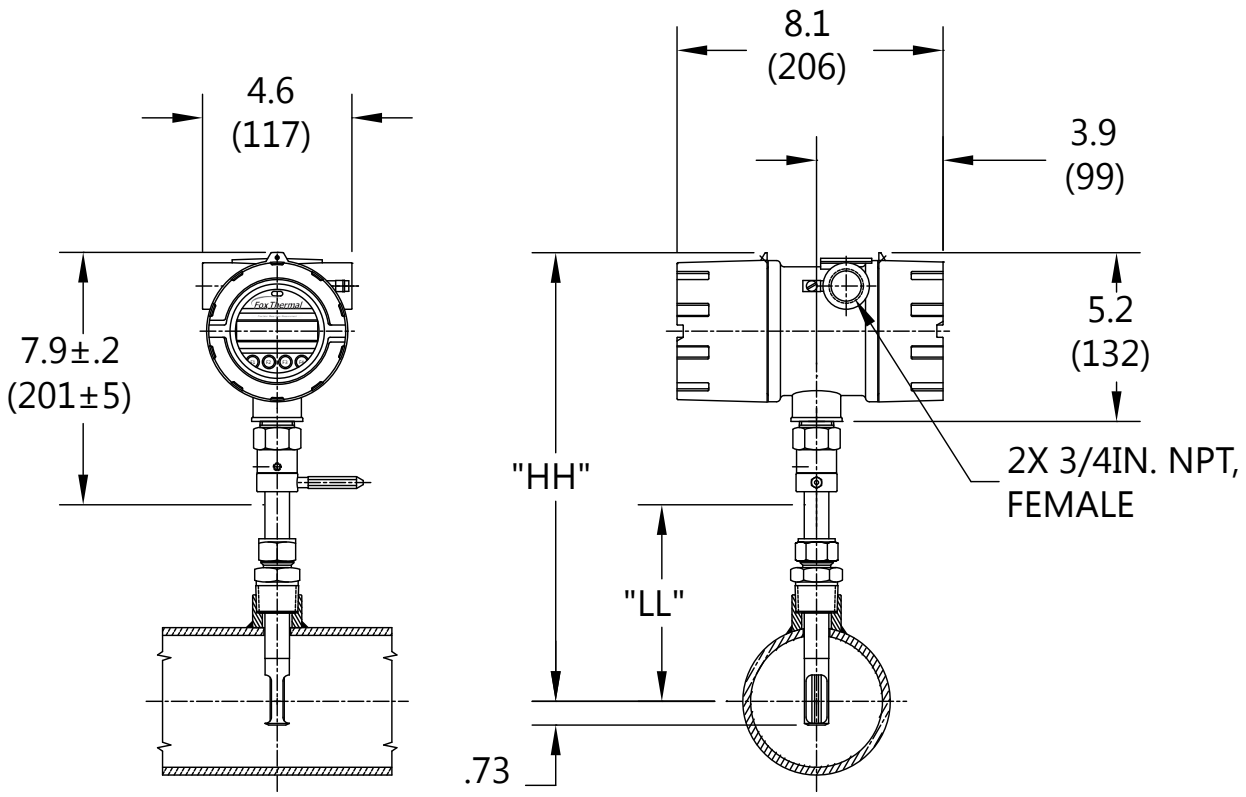

Table 7.4: Insertion Meter with 316 stainless steel probe

Probe Option	Probe Length	Dimension “LL” ± .10	Dimension "HH" ± .30
[model code]	[inches]	[inches / millimeters]	[inches / millimeters]
06I	6"	6.0" (152mm)	13.9" (353mm)
09I	9"	9.0" (229mm)	16.9" (429mm)
12I	12"	12.0" (305mm)	19.9" (505mm)
15I	15"	15.0" (381mm)	22.9" (582mm)
18I	18"	18.0" (457mm)	25.9" (658mm)
24I	24"	24.0" (610mm)	31.9" (810mm)
30I	30"	30.0" (762mm)	37.9" (963mm)
36I	36"	36.0 " (914mm)	43.9" (1115mm)

Fig 7.5: Insertion Remote Meter Dimensions

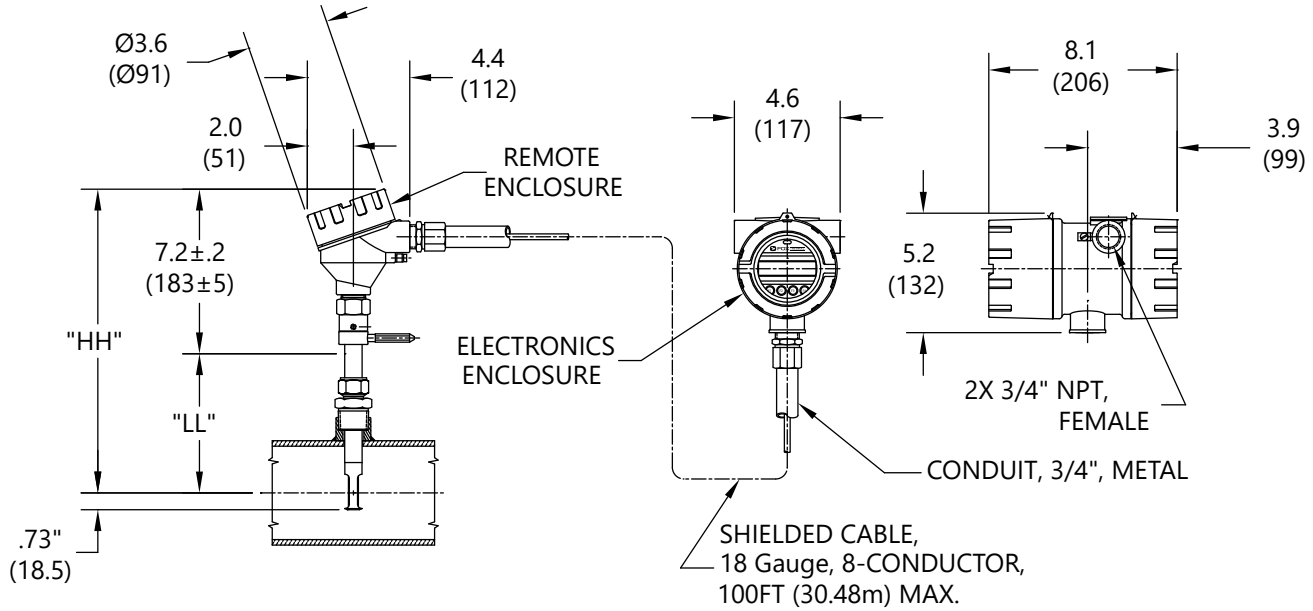

Table 7.5: Insertion Remote Meter with 316 stainless steel probe

Probe Option	Probe Length	Dimension "LL" ± .10	Dimension "HH" ± .30
[model code]	[inches]	[inches / millimeters]	[inches / millimeters]
06I	6"	6.0" (152mm)	13.2" (335mm)
09I	9"	9.0" (229mm)	16.2" (411mm)
12I	12"	12.0" (305mm)	19.2" (488mm)
15I	15"	15.0" (381mm)	22.2" (564mm)
18I	18"	18.0" (457mm)	25.2" (640mm)
24I	24"	24.0" (610mm)	31.2" (792mm)
30I	30"	30.0" (762mm)	37.2" (945mm)
36I	36"	36.0" (914mm)	43.2" (1097mm)

Fig. 7.6: Inline Meter with Flow Body and NPT End Connections Dimensions

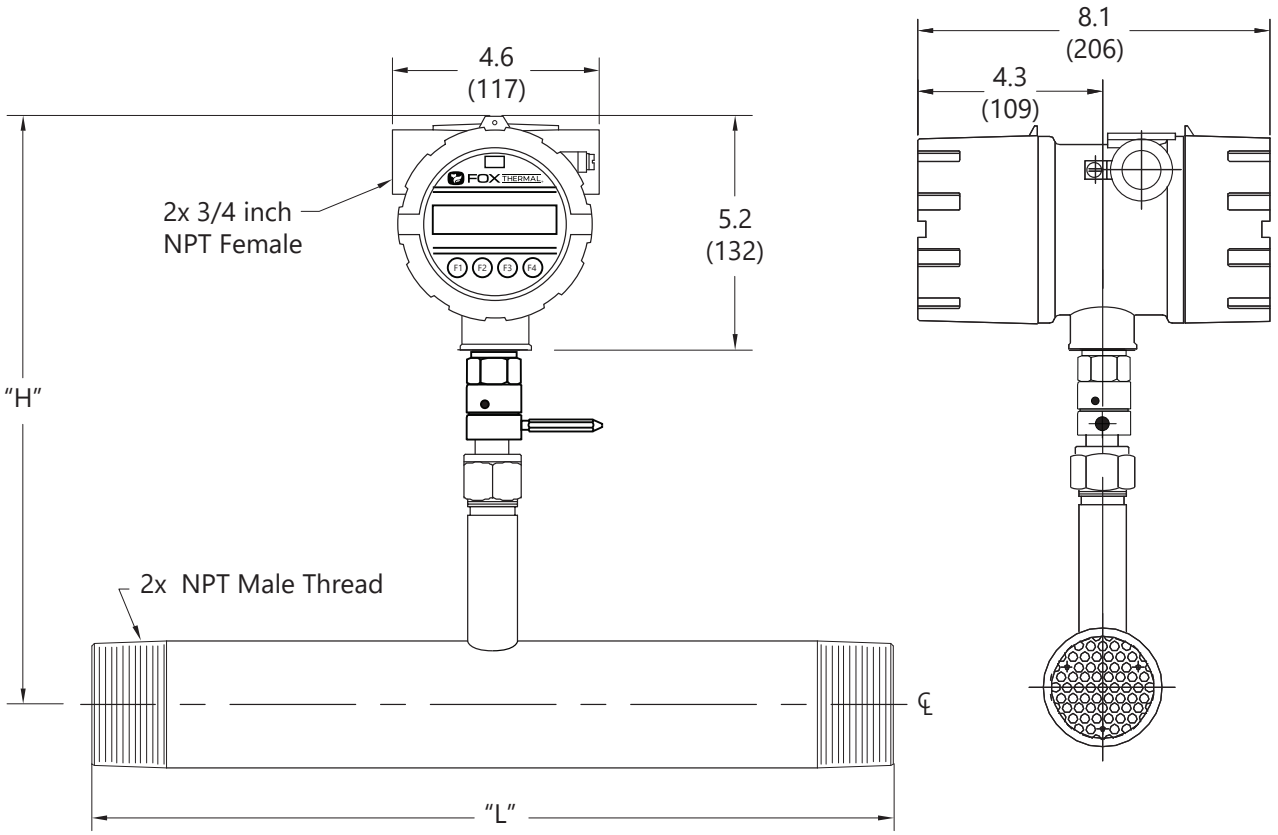

Table 7.6: Inline Meter with Flow Body and NPT End Connections

Flow Body Option	Pipe Size	Dimension "L" ± .10	Dimension "H" ± .30
[model code]	[inches]	[inches]	[inches / millimeters]
075P *	0.75"	12"	11.9" (302mm)
10P *	1.00"	12"	11.9" (302mm)
125P *	1.25"	12"	11.9" (302mm)
15P *	1.50"	12"	13.9" (353mm)
20P **	2.00"	12"	13.9" (353mm)
25P **	2.25"	18"	13.9" (353mm)
30P **	3.00"	18"	13.9" (353mm)

**Available in 316 stainless steel pipe only.*
***Available in 316 stainless steel pipe or A106 grade B carbon steel pipe + A105 flanges.*

Fig 7.7: Inline Remote Meter with Flow Body and NPT End Connections Dimensions

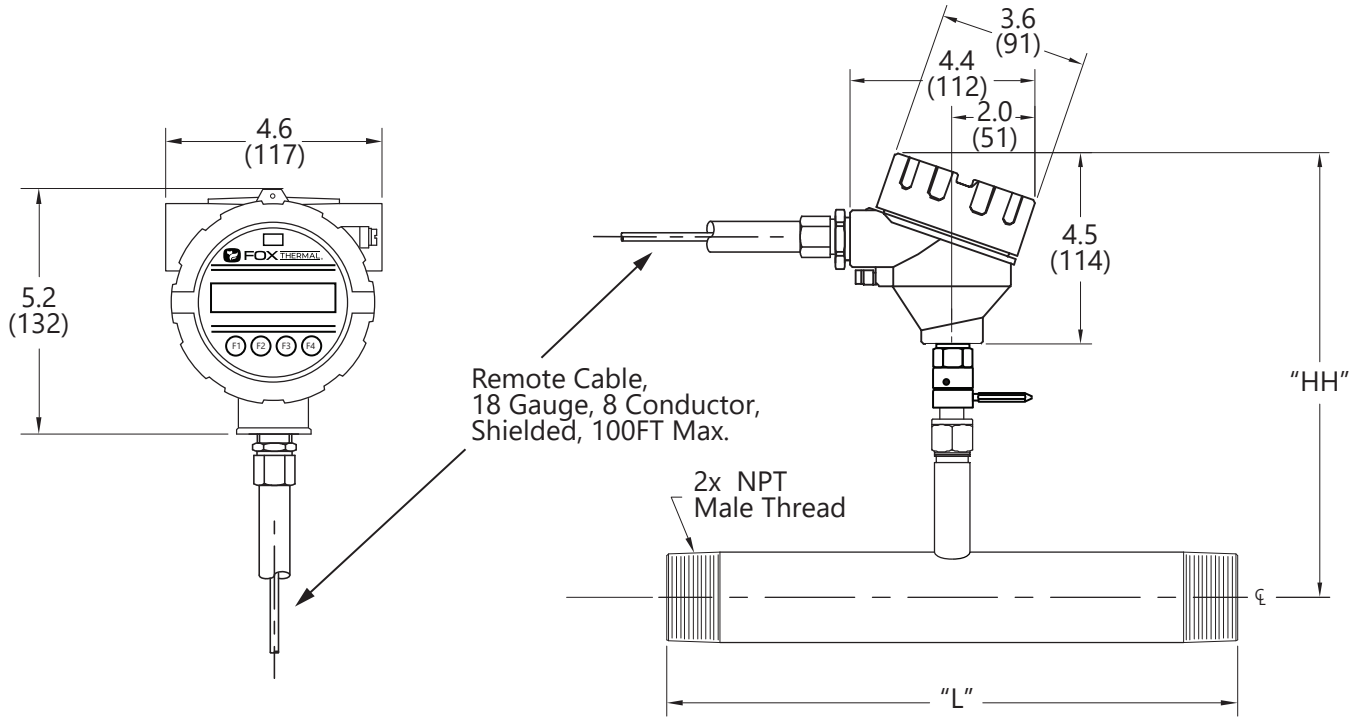

Table 7.7: Inline Remote Meter with Flow Body and NPT End Connections

Flow Body Option	Pipe Size	Dimension "L" ± .10	Dimension "HH" ± .30
[model code]	[inches]	[inches]	[inches / millimeters]
075P *	0.75"	12"	11.2" (284mm)
10P *	1.00"	12"	11.2" (284mm)
125P *	1.25"	12"	11.2" (284mm)
15P *	1.50"	12"	13.2" (355mm)
20P **	2.00"	12"	13.2" (355mm)
25P **	2.50"	18"	13.2" (355mm)
30P **	3.00"	18"	13.2" (355mm)

**Available in 316 stainless steel pipe only.*
***Available in 316 stainless steel pipe or A106 grade B carbon steel pipe + A105 flanges.*

Fig. 7.8: Inline Meter with Flow Body and 150 lb. RF Flange End Connections Dimensions

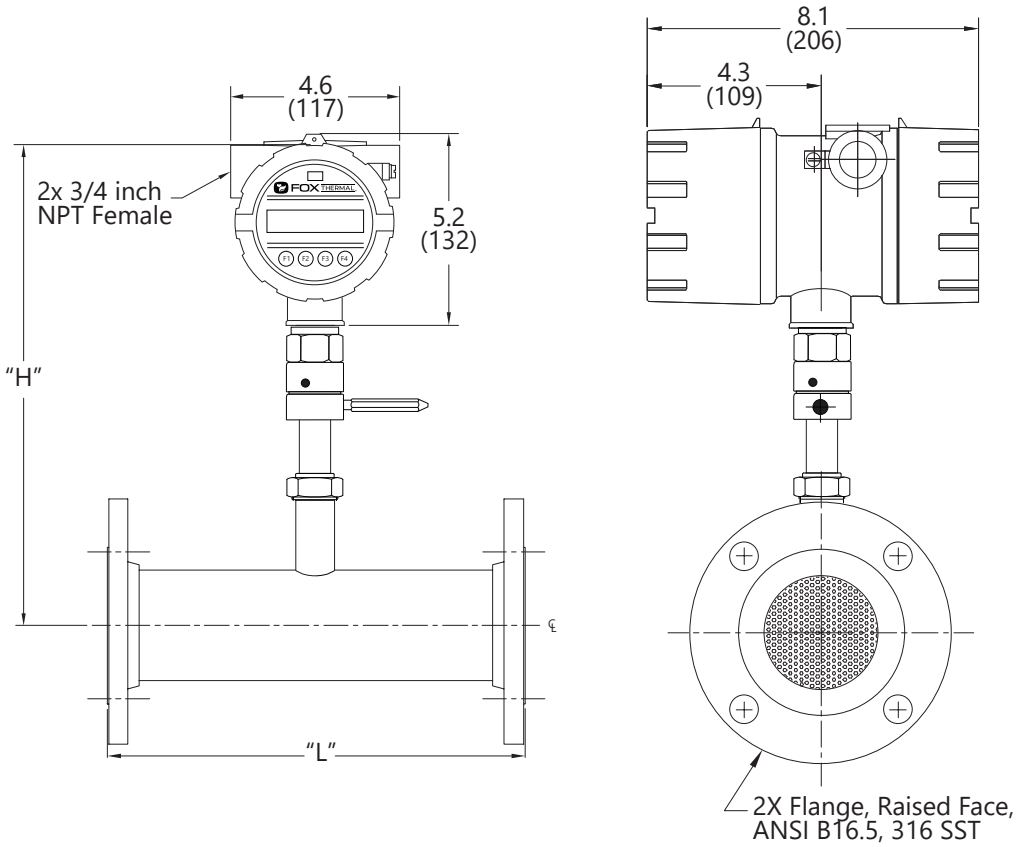

Table 7.8: Inline Meter with Flow Body and 150 lb. RF Flange End Connections Dimensions

Flow Body Option	Pipe Size	Dimension "L" ± .10	Dimension "H" ± .30
[model code]	[inches]	[inches]	[inches / millimeters]
075F *	0.75"	12"	11.9" (302mm)
10F *	1.00"	12"	11.9" (302mm)
125F *	1.25"	12"	11.9" (302mm)
15F *	1.50"	12"	13.9" (353mm)
20F **	2.00"	12"	13.9" (353mm)
25F **	2.50"	18"	13.9" (353mm)
30F **	3.00"	18"	13.9" (353mm)
40F **	4.00"	18"	13.9" (353mm)
60F **	6.00"	24"	13.9" (353mm)

**Available in 316 stainless steel pipe only.*
***Available in 316 stainless steel pipe or A106 grade B carbon steel pipe + A105 flanges.*

Fig 7.9: Inline Remote Meter with Flow Body and 150 lb. RF Flange End Connections Dimensions

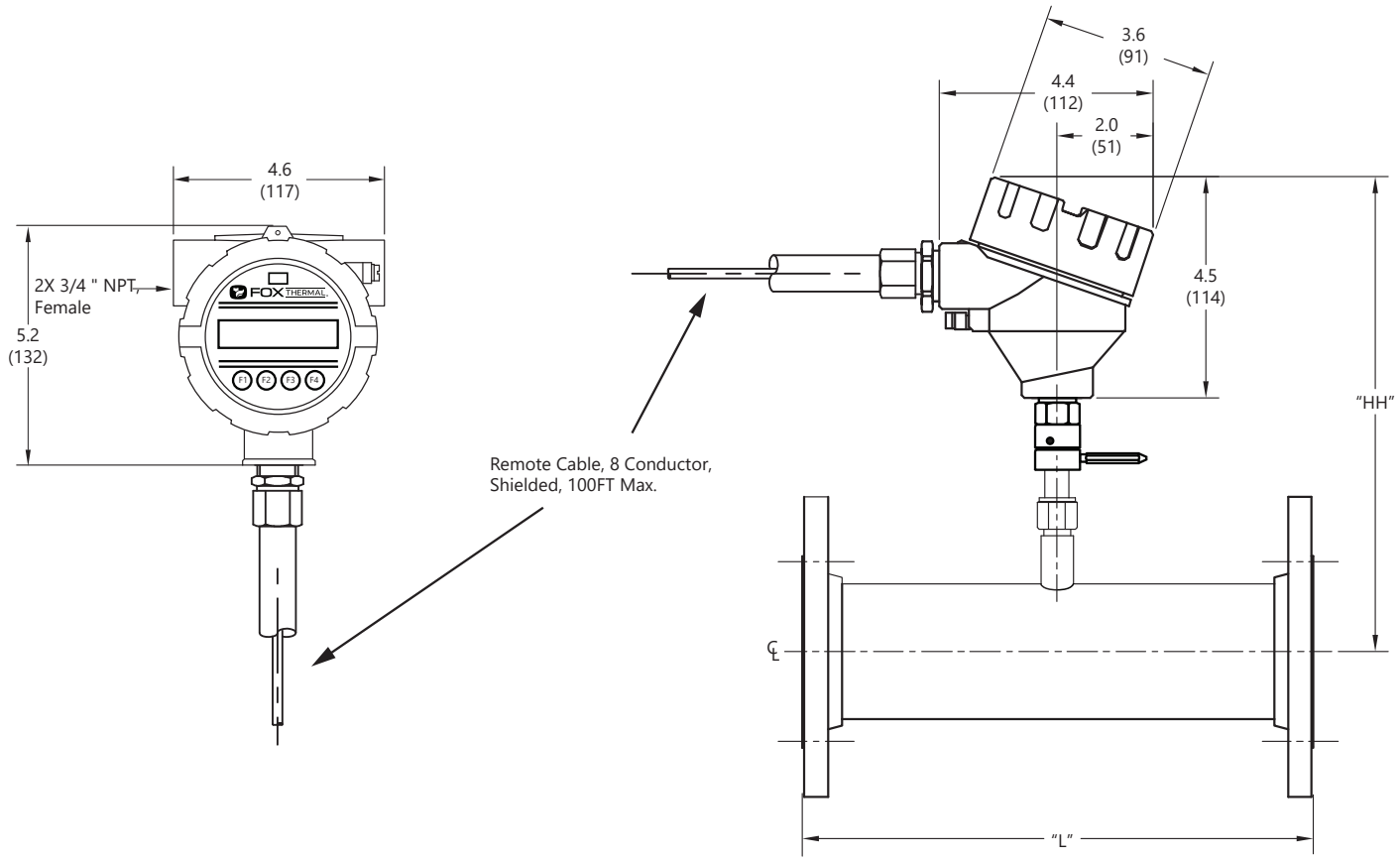

Table 7.9: Inline Remote Meter with Flow Body and 150 lb. RF Flange End Connections Dimensions

Flow Body Option	Pipe Size	Dimension "L" ± .10	Dimension "HH" ± .30
[model code]	[inches]	[inches]	[inches / millimeters]
075F *	0.75"	12"	11.2" (284mm)
10F *	1.00"	12"	11.2" (284mm)
125F *	1.25"	12"	11.2" (284mm)
15F *	1.50"	12"	13.2" (335mm)
20F **	2.00"	12"	13.2" (335mm)
25F **	2.50"	18"	13.2" (335mm)
30F **	3.00"	18"	13.2" (335mm)
40F **	4.00"	18"	13.2" (335mm)
60F **	6.00"	24"	13.2" (335mm)

**Available in 316 stainless steel pipe only.*
***Available in 316 stainless steel pipe or A106 grade B carbon steel pipe + A105 flanges.*

Fig. 7.10: Inline Meter with Flow Body and 300 lb. RF Flange End Connections Dimensions

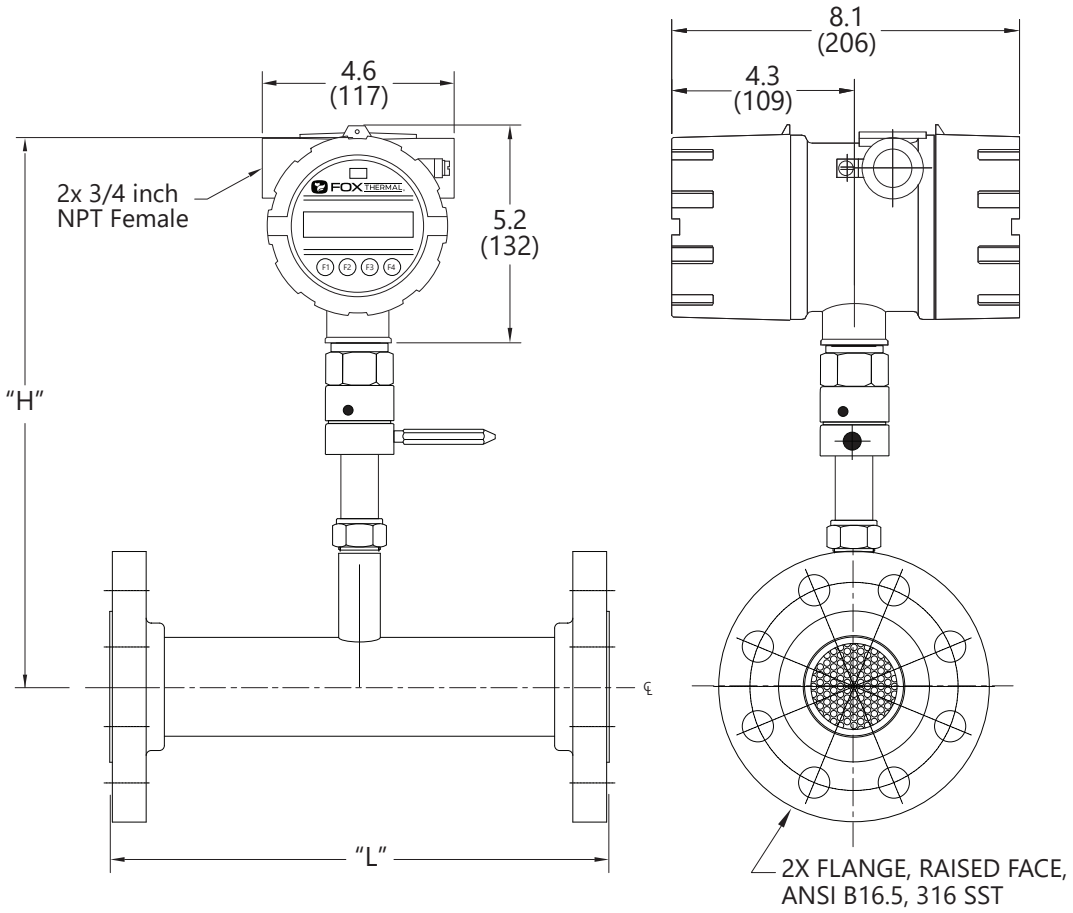

Table 7.10: Inline Meter with Flow Body and 300 lb. RF Flange End Connections Dimensions

Flow Body Option	Pipe Size	Dimension "L" ± .10	Dimension "H" ± .30
[model code]	[inches]	[inches]	[inches / millimeters]
15G *	1.50"	12"	13.9" (353mm)
20G **	2.00"	12"	13.9" (353mm)
25G **	2.50"	18"	13.9" (353mm)
30G **	3.00"	18"	13.9" (353mm)
40G **	4.00"	18"	13.9" (353mm)
60G **	6.00"	24"	13.9" (353mm)

**Available in 316 stainless steel pipe only.*
***Available in 316 stainless steel pipe or A106 grade B carbon steel pipe + A105 flanges.*

Fig 7.11: Inline Remote Meter with Flow Body and 300 lb. RF Flange End Connections Dimensions

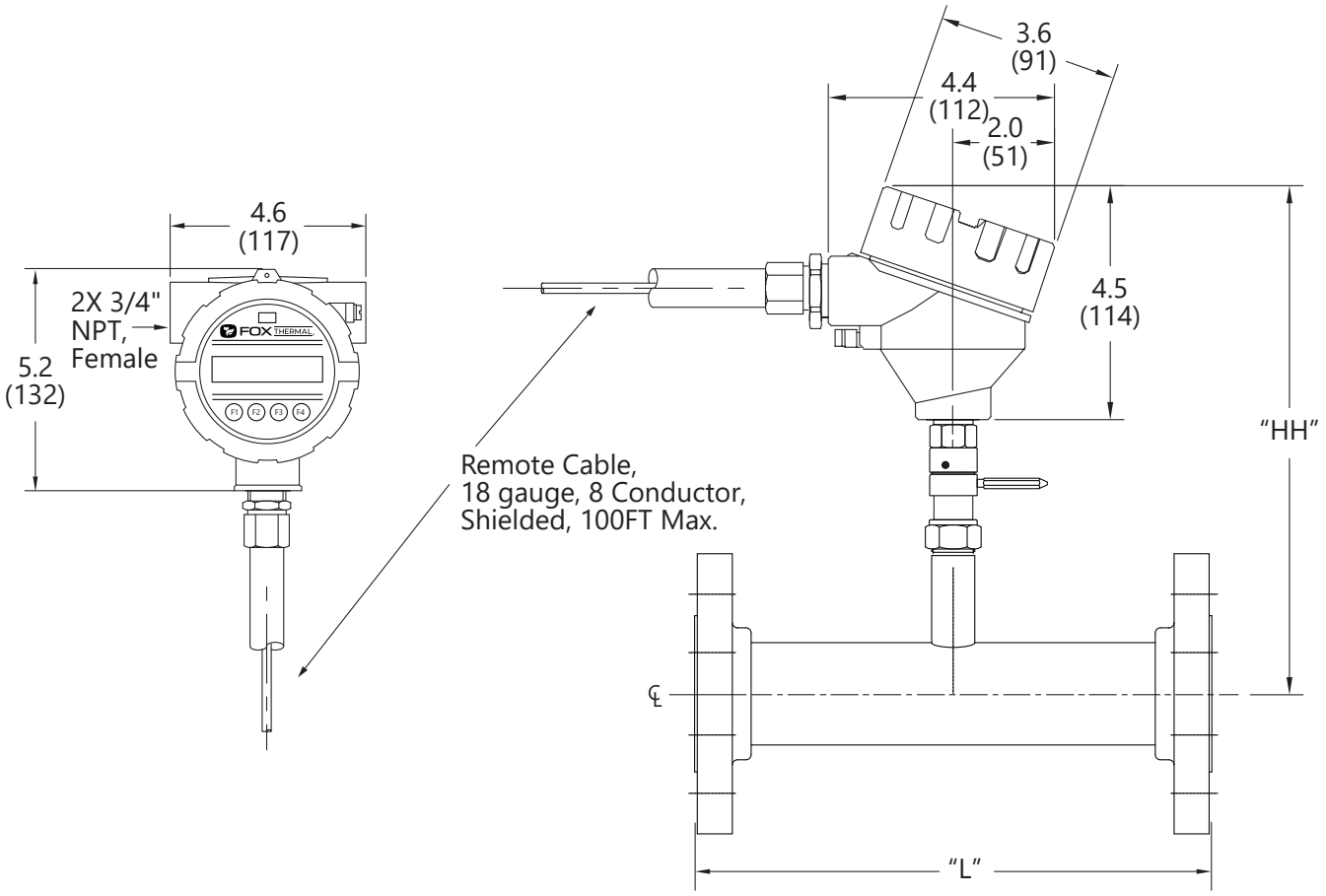

Table 7.11: Inline Remote Meter with Flow Body and 300 lb. RF Flange End Connections Dimensions

Flow Body Option	Pipe Size	Dimension "L" ± .10	Dimension "HH" ± .30
[model code]	[inches]	[inches]	[inches / millimeters]
15G *	1.50"	12"	13.2" (335mm)
20G **	2.00"	12"	13.2" (335mm)
25G **	2.50"	18"	13.2" (335mm)
30G **	3.00"	18"	13.2" (335mm)
40G **	4.00"	18"	13.2" (335mm)
60G **	6.00"	24"	13.2" (335mm)

**Available in 316 stainless steel pipe only.*
***Available in 316 stainless steel pipe or A106 grade B carbon steel pipe + A105 flanges.*

Warranty Statement and Terms and Conditions

Limited Warranty - All Products

Fox Thermal warrants that for a period of one year following the date of original shipment of Fox's products that the product will conform to Fox's standard written specifications applicable to such product and will be free from defects in workmanship. For more details, view the Limited Warranty section in the Terms & Conditions of Sale. Find that document at this link:

https://www.foxthermal.com/pdf/terms-and-conditions.pdf

Consumable and Fragile Material Warranty

Fox warrants that consumable materials, supplied by Fox either as part of an instrument or system, or separately, will be free from defects in material and workmanship at the time of shipment. A list of key consumables and expected lifetimes may be found in the applicable Seller equipment operation and maintenance manual.

Terms and Conditions of Sale

For more details about Fox's warranty statement and exclusions, please download the Terms & Conditions of Sale document. Find that document at this link:

https://www.foxthermal.com/pdf/terms-and-conditions.pdf

Returning Your Meter

If you need to return your meter to the factory for evaluation, recalibration, or repair services, please register in our Service Portal online. You can find the Service Portal by going to our website at: www.foxthermal.com

Look for the "Account" login in the top right of the homepage.

Once registered, you can log into the Service Portal and generate an RMA for return of your meter to the Fox Thermal factory.

Rush recalibration service is available for a fee. Restrictions apply.

Tracking Your RMA (Meter Service Status)

If you have already generated an RMA and shipped your meter to Fox Thermal for service, you can log into the Service Portal to check the status of your return.

What to expect while your meter is being serviced

Depending on the type of service required when returning your Fox Thermal meter, there are varying turnover times for servicing a meter. The average time needed to service the meter is 7-10 days (not including shipping or peak production times).

Glossary of Terms and Definitions

AWG	American Wire Gauge
Bara	Bar absolute
CTC	Contact
CAL	Calibration
CHG	Change
COM	Communication
CSV	Current Sense Voltage
DC	Direct Current
DCS	Distributed Control System
DN	Down
DSP	Display
ELP	Elapsed time
Feq	Frequency
Ft^2	Square Feet
I/O	Input/Output
INP	Input
LB	Pound
LB/D	Pound per Day
LB/H	Pound per Hour
LB/M	Pound per Minute
LB/S	Pound per Second
LCD	Liquid Crystal Display
KG	Kilogram
KG/H	Kilogram per Hour
KG/M	Kilogram per Minute
KG/S	Kilogram per Second
M^2	Square Meter
mmHG	Pressure in millimeters of mercury
MMSCFD	Million Standard Cubic Feet per Day
MS/TP	Master-Slave/Token Passing
MXFLO	Maximum Flow
NAESB	North American Energy Standards Board
NEMA	National Electrical Manufactures Association
NIST	National Institute of Standards and Technology
NL	Normal Liter
NLPH	Normal Liter per Hour
NLPM	Normal Liter per Minute
NM3	Normal cubic Meter
NM3/H	Normal cubic Meter per Hour
NM3/M	Normal cubic Meter per Minute
NPT	National Pipe Thread
PC	Personal Computer
P/U	Pulse per Unit
PIP A^2	Pipe Area
PLC	Programmable Logic Controller
PRM	Parameters
PRS	Pressure
PSIA	Pounds per Square Inch Absolute
Pt	Point
PSW	Password
SIM	Simulation
SCF	Standard Cubic Feet
SCFM	Standard Cubic Feet per Minute
SCFH	Standard Cubic Feet per Hour
SCFD	Standard Cubic Feet per Day
SPC	Special Control
STP	Standard Temperature and Pressure
TMP	Temperature
TSI	Internal Variable
TSV	Internal Variable
UNT	Unit
U/P	Unit per Pulse
420	4-20mA output

Index

Access to Electronics, p. 33
Alarm Codes, p. 112
Alarm wiring, p. 41
Analog 4-20mA output, p. 51
Breakage or Damage of Probe, p. 105
CAL-V™, p. 114
Dimension Details, p. 118
Discrete output setting, p. 54
Display Screens, p. 49
Display Setup, p. 56
Entering the programming mode, p. 50
Filter value, p. 50
Flow Meter Placement, p. 21
Flow Units, p. 61
Pulse/alarm Output, p. 53
Fuse Replacement, p. 104
Glossary, p. 130
Installation,
  Compression Fitting - Insertion, p. 33
  Lateral Placement, p. 21
  Mounting, p. 21
  Orientation of Meter - Insertion, p. 27
Introduction, p. 17
Level 2 password, p. 60
Local Display, p. 19
Local Input Wiring, p. 36
Mass Flow, p. 17
Measurement Mode, p. 49
Menu Tree,
  Digital Output, p. 9
  Display Menu, p. 12
  Engineering Display, p. 13
  Gas-SelectX®, p. 14
  Main Menu, p. 8
  Flow Menu 1, p. 10
  Flow Menu 2, p. 11
  CAL-V™ Menu, p. 13
Mounting meter, p. 21
Orientation of meter - Insertion type, p. 27
Password
  Level 1, p. 57
  Level 2, p. 57
  Programming, p. 61
Power Input Wiring, p. 36
Preventative Maintenance, p. 104
Product Description, p. 17
Programming
  Analog 4-20mA Output, p. 51
  Alarm Output, p. 54
  Changing values or strings, p. 50
  Display Setup, p. 56
  Flow Parameters, p. 63
  Flow and maximum pulse/alarm, p. 54
  Pulse/alarm Output, p. 53
  Password, p. 61
  Programming Mode, p. 50
  Pulse-per-unit, p. 53
  Reset CRC, p. 68
  Selecting from a list, p. 50
  Serial Communication, p. 55
  Simulation, p. 69
  Unit-per-pulse, p. 54
  Unit settings, p. 61
  Using the Local Display, p. 50
Replacements Fuses, p. 104
Return Procedure, p. 129
Sensor Cleaning, p. 104
Sensor Orientation, p. 27
Simulation Mode, p. 69
Theory of Operation, p. 17
To program the display, p. 57
Troubleshooting, p. 110
  Alarm Codes, p. 112
  General, p. 110
  Installation Problems, p. 109
USB Interface, p. 48
Warranty, p. 129
Wiring
  Alarms, p. 40
  Pulse/Alarm Outputs, p. 40
  Grounding, p. 35
  Input - Local, p. 36
  Instructions, p. 33
  Local meters, p. 36
  Power Input, p. 36
  Precautions, p. 34

Wiring

Troubleshooting Tips

NOTE! is used for Notes and Information

WARNING! is used to indicate a hazardous situation which, if not avoided, could result in death or serious injury.

CAUTION! is used to indicate a hazardous situation which, if not avoided, could result in minor or moderate injury.

Indicates compliance with the WEEE Directive. Please dispose of the product in accordance with local regulations and conventions.

FOX® THERMAL

Make Downtime a Thing of the Past

THERMAL MASS FLOW METERS
NON-STOP PERFORMANCE

SALES@FOXTHERMAL.COM

Phone
831.384.4300

Address
399 Reservation Road
Marina, CA 93933 USA

Worldwide
foxthermal.com