MODEL

FT1

Fox Thermal Gas Mass Flow Meter

Instruction Manual

Document #106012

Rev M

FOX® THERMAL

831.384.4300 | 399 Reservation Rd, Marina, CA 93933 | foxthermal.com

This publication must be read in its entirety before performing any operation. Failure to understand and follow these instructions could result in serious personal injury and/or damage to the equipment. Should this equipment require repair or adjustment beyond the procedures given herein, contact the factory at:

FOX THERMAL INSTRUMENTS, INC.
399 RESERVATION ROAD
MARINA, CA 93933
TELEPHONE: 831-384-4300
EMAIL: SERVICE@FOXTHERMAL.COM

Download Technical Data Sheets from our website:
www.foxthermal.com

Fox Thermal Instruments, Inc. (Fox Thermal) believes that the information provided herein is accurate; however, be advised that the information contained herein is NOT a guarantee for satisfactory results. Specifically, this information is neither a warranty nor guarantee, expressed or implied, regarding performance, merchantability, fitness, or any other matter with respect to the products; nor recommendation for the use of the product/process information in conflict with any patent. Please note that Fox Thermal reserves the right to change and/or improve the product design and specification without notice.

Fox Thermal FT1 Manuals:
- **Fox Thermal FT1 View™ Manual**
- **ModbusView™ Software Manual**

All Fox Thermal Manuals and software available in English.
Translations of manuals are available upon request to service@foxthermal.com.

Table of Contents

1. Introduction

a. Quick Start Guide . . . . . p. 6

b. Menu Trees . . . . . p. 8

c. General . . . . . p. 16

2. Installation (Mechanical)

a. Lateral Placement . . . . . p. 20

b. Welding Branch Outlet to Pipe (Insertion) . . . . . p. 22

c. Installation Depth . . . . . p. 23

d. Orientation . . . . . p. 24

e. Mounting Instructions . . . . . p. 26

f. Retractor Installation . . . . . p. 28

3. Wiring (Electrical)

a. Wiring Access . . . . . p. 32

b. Input Power . . . . . p. 34

c. 4-20mA Output Wiring . . . . . p. 35

d. Pulse/Alarm Wiring (optional feature) . . . . . p. 37

e. RS485 Wiring: Modbus RTU or BACnet MS/TP (optional feature) . . . . . p. 39

f. HART Wiring . . . . . p. 40

4. Operation (Standard Operation)

a. Start Up . . . . . p. 43

b. Programming . . . . . p. 45

c. CAL-V™ . . . . . p. 62

d. Gas-SelectX® . . . . . p. 64

5. Communication Protocols

a. Modbus RTU (RS485) . . . . . p. 68

b. BACnet MS/TP (RS485) . . . . . p. 80

c. HART . . . . . p. 83

6. Maintenance
a. Safe Meter Removal from Retractor . . . . . p. 91
b. Troubleshooting . . . . . p. 95
c. Alarm Codes . . . . . p. 98
7. Appendices
a. Specifications . . . . . p. 100
b. Agency Approvals . . . . . p. 103
c. Dimensions . . . . . p. 104
d. Warranty . . . . . p. 108
e. Returning your meter . . . . . p. 109
8. Definitions p. 110

9. Index p. 111

Use the table below as a guide while using the worksheet on the next page to record your notes.

NOTE! Please read the entire quick-start procedure before beginning installation.

1.	Record inside diameter (ID). Ensure the actual pipe ID matches the pipe ID shown on the factory calibration certificate. If IDs do not match, refer to "Pipe Diameter" on page 56.	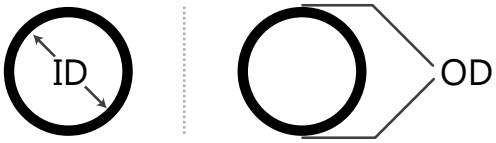
2.	Record up/downstream straight-pipe requirements based on Pipe ID and meter style (insertion or inline). [refer to p. 20]	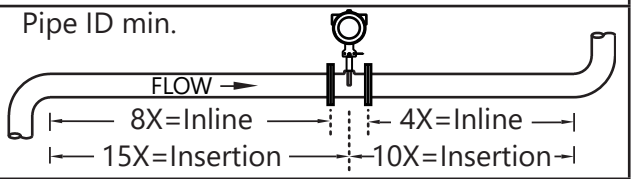
3.	The Flow Direction Indicator must point in the direction of flow. The housing can be rotated for a better view of the meter's display. Note that the 2 set screws must be loosened before the housing will turn. [refer to p. 24]	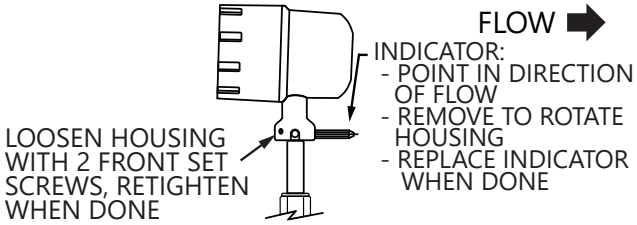
4.	Ensure correct probe depth setting. If using 1 ½" size pipe, please see note on p. 23.	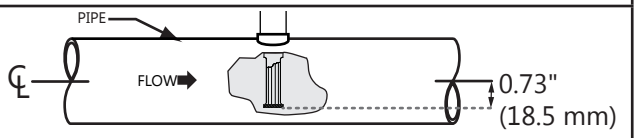
5.	Open the housing. If needed, the orientation of display can be rotated in 90° increments for a better view. [refer to p. 25 for more information]	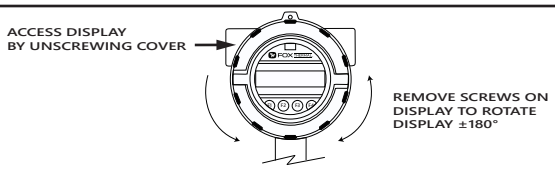
6.	Ensure power wiring and output signal wiring are properly connected. [refer to Wiring section p. 32 for more information] The Pulse/Alarm and serial communication wiring options are based on model type.	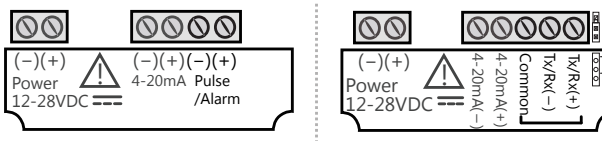
7.	Apply power to the flow meter.	
8.	Check the remaining flow meter settings by accessing the meter settings either through the front panel of the display or by using the ModbusView™ or FT1 View™ software. Record the settings in the spaces given for items A - E on the following page.	

Before applying power to your meter, use this worksheet to record your notes.

	Item to verify	*Serial Number:*	*Serial Number:*	*Serial Number:*	*Serial Number:*
1.	What is the Pipe ID?	ID =	ID =	ID =	ID =
2.	Calculate the Upstream/ Downstream straight-pipe requirements	UP = DN =	UP = DN =	UP = DN =	UP = DN =
3.	Is the flow indicator pointed in direction of flow? Must the housing be rotated for easy viewing?	Y / N Y / N	Y / N Y / N	Y / N Y / N	Y / N Y / N
4.	Is the probe depth setting correct?	Y / N	Y / N	Y / N	Y / N
5.	Have you rotated the display for easier viewing?	Y / N	Y / N	Y / N	Y / N
6.	Verify proper power wiring				
7.	Verify proper input/output wiring				

After applying power to your meter, check items A - E below by accessing the meter settings either through the front panel of the meter's display or by using the ModbusView™ or FT1 View™ software.

A.	Which flow units have been set in meter? (SCFM, KG/H, etc..)				
B.	Correct values for reference temperature and pressure?	Y / N	Y / N	Y / N	Y / N
C.	Confirm the pipe ID listed above same as "Pipe_id="				
D.	Verify 4mA and 20mA meter settings	4mA = 20mA =	4mA = 20mA =	4mA = 20mA =	4mA = 20mA =
E.	Confirm the correct gas is selected for your application in the Gas-SelectX® menu				

Your Notes:

If you are experiencing any problems after completing this procedure, please call the Fox Thermal Service Department at 831-384-4300 to review this information.

Fig. 1.1: FT1 Menu Tree - Main Menu

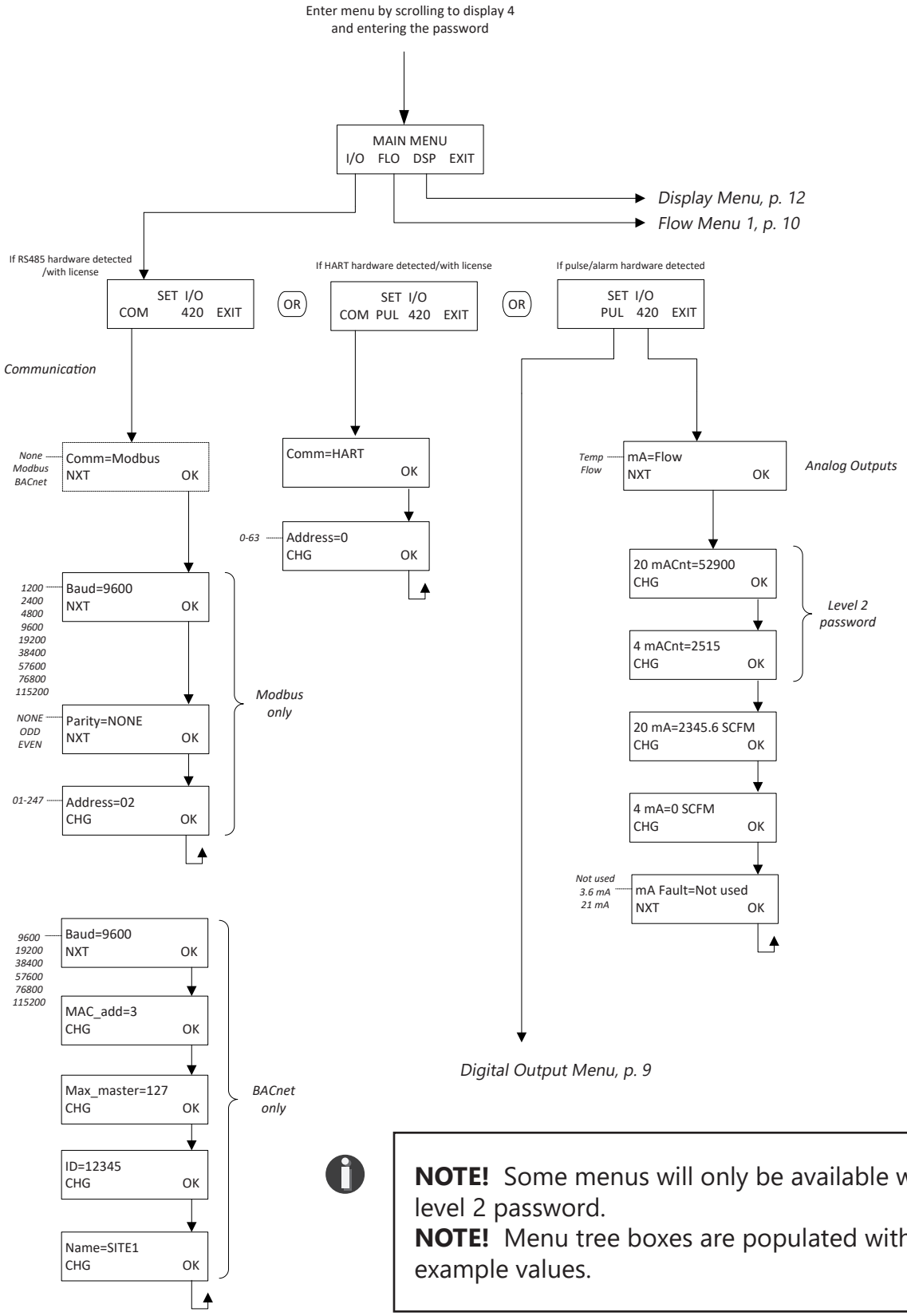

NOTE! Some menus will only be available with a level 2 password.
NOTE! Menu tree boxes are populated with example values.

Fig. 1.2: FT1 Menu Tree - Digital Outputs

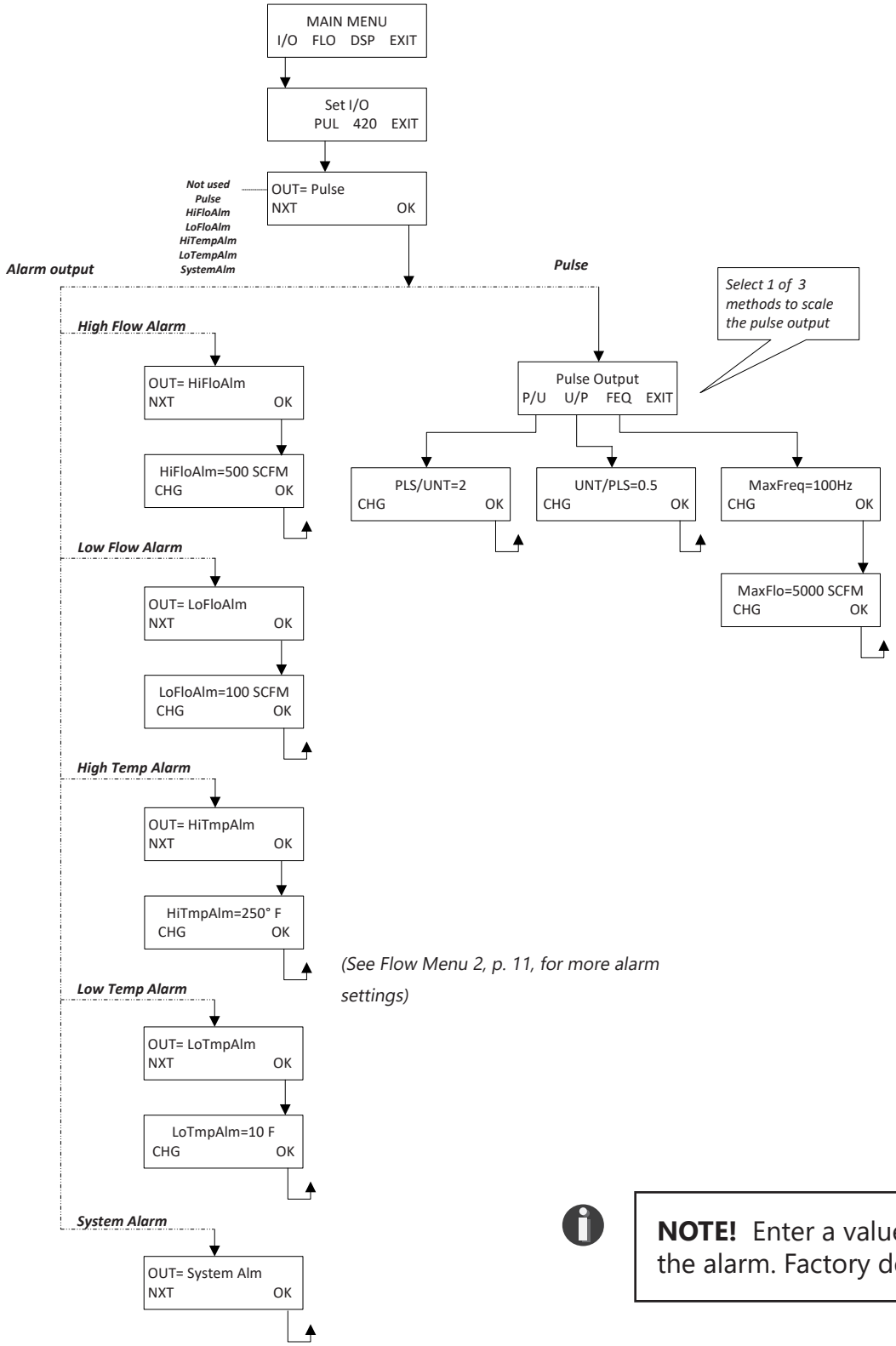

NOTE! Enter a value of 0 to disable the alarm. Factory default is 0.

Fig. 1.3: FT1 Menu Tree - Flow Menu 1

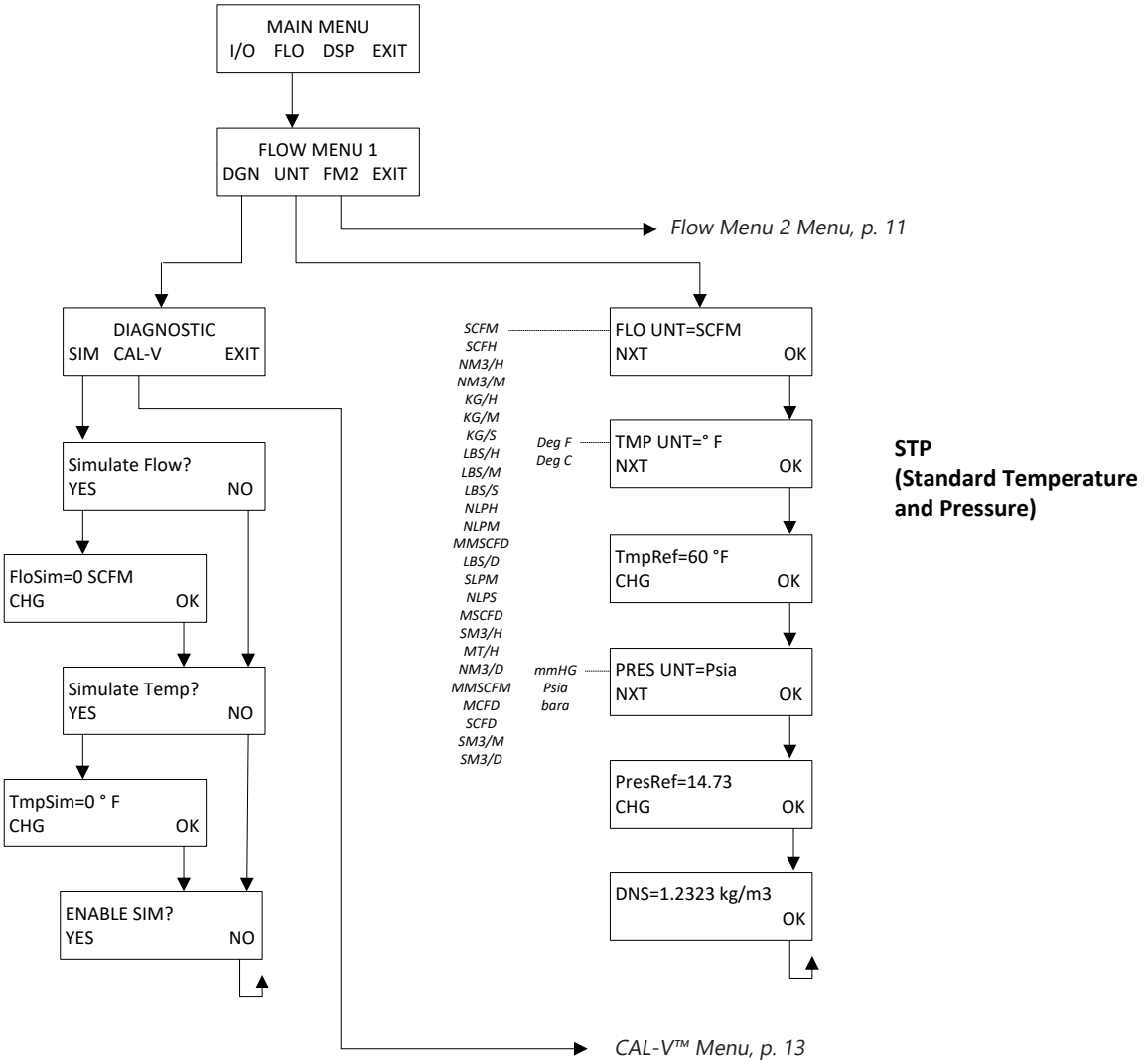

Fig. 1.4: FT1 Menu Tree - Flow Menu 2

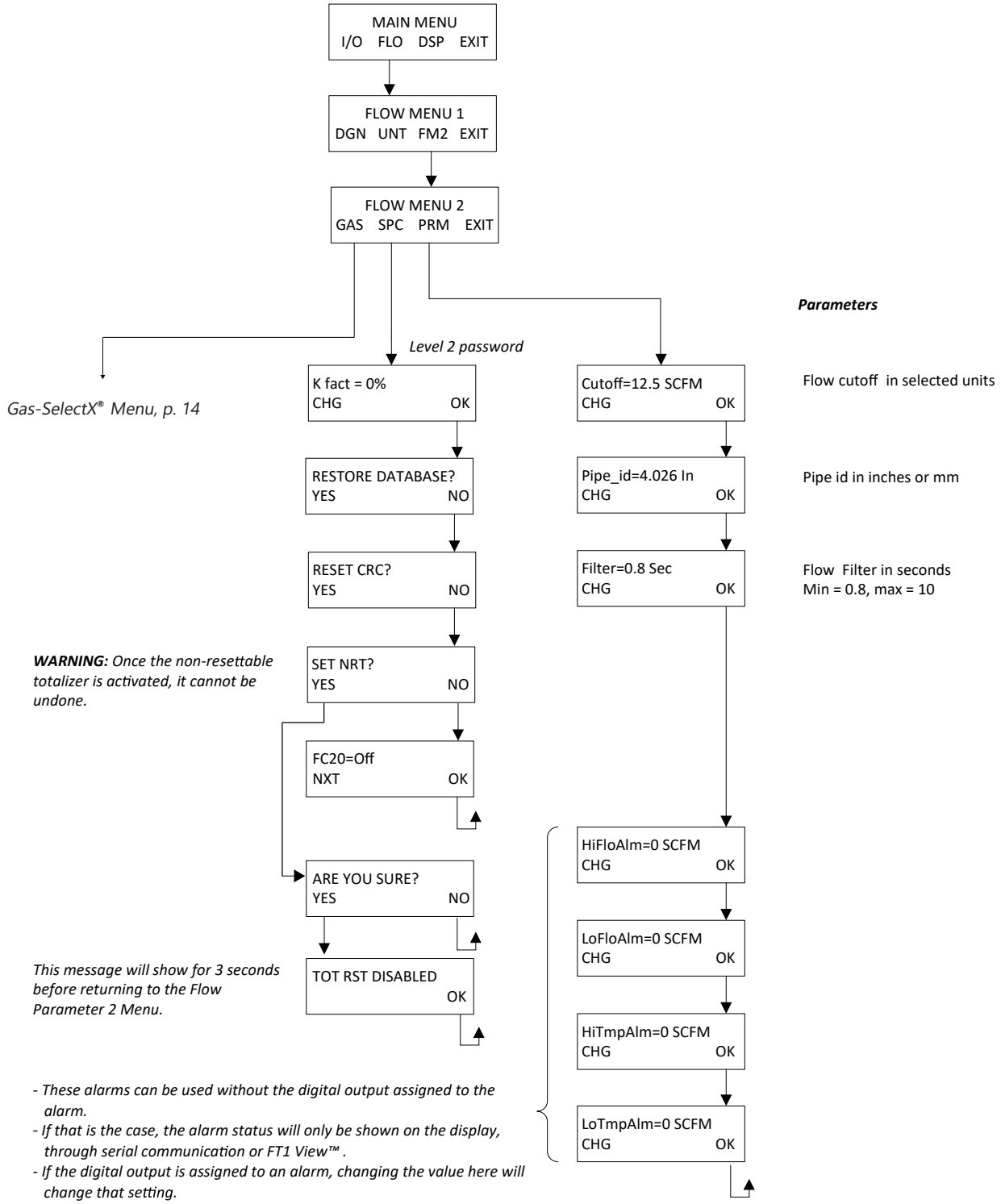

Fig. 1.5: FT1 Menu Tree - Display Menu

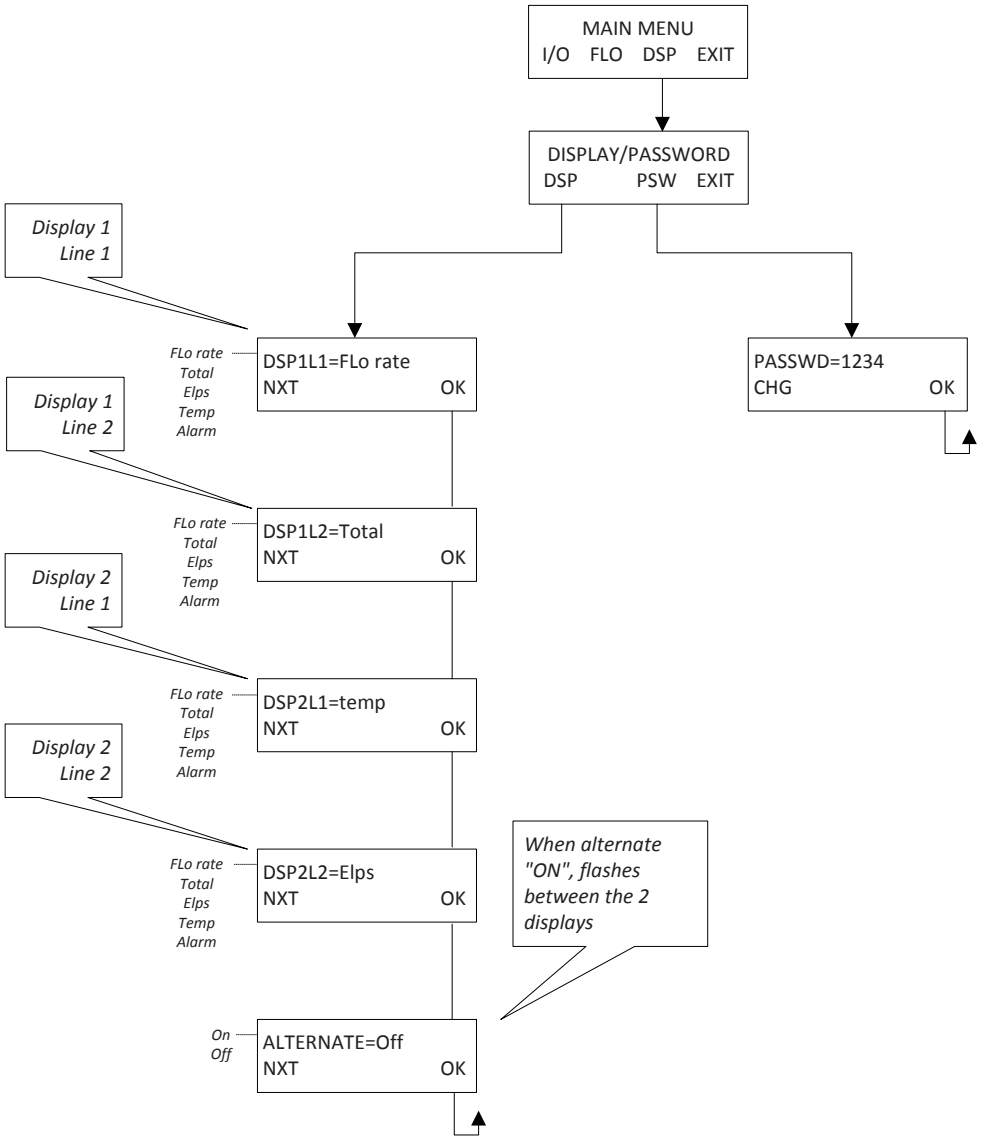

NOTE! All readings updated every second

- *Flo Rate = Flow rate of process gas*
- *Total = Total flow of process gas*
- *Elps = Elapsed time since reset of flow total*
- *Temp = Temperature of process gas*
- *Alarm = Notification of errors; diagnostic errors*

Fig. 1.6: FT1 Menu Tree - CAL-V™ Menu

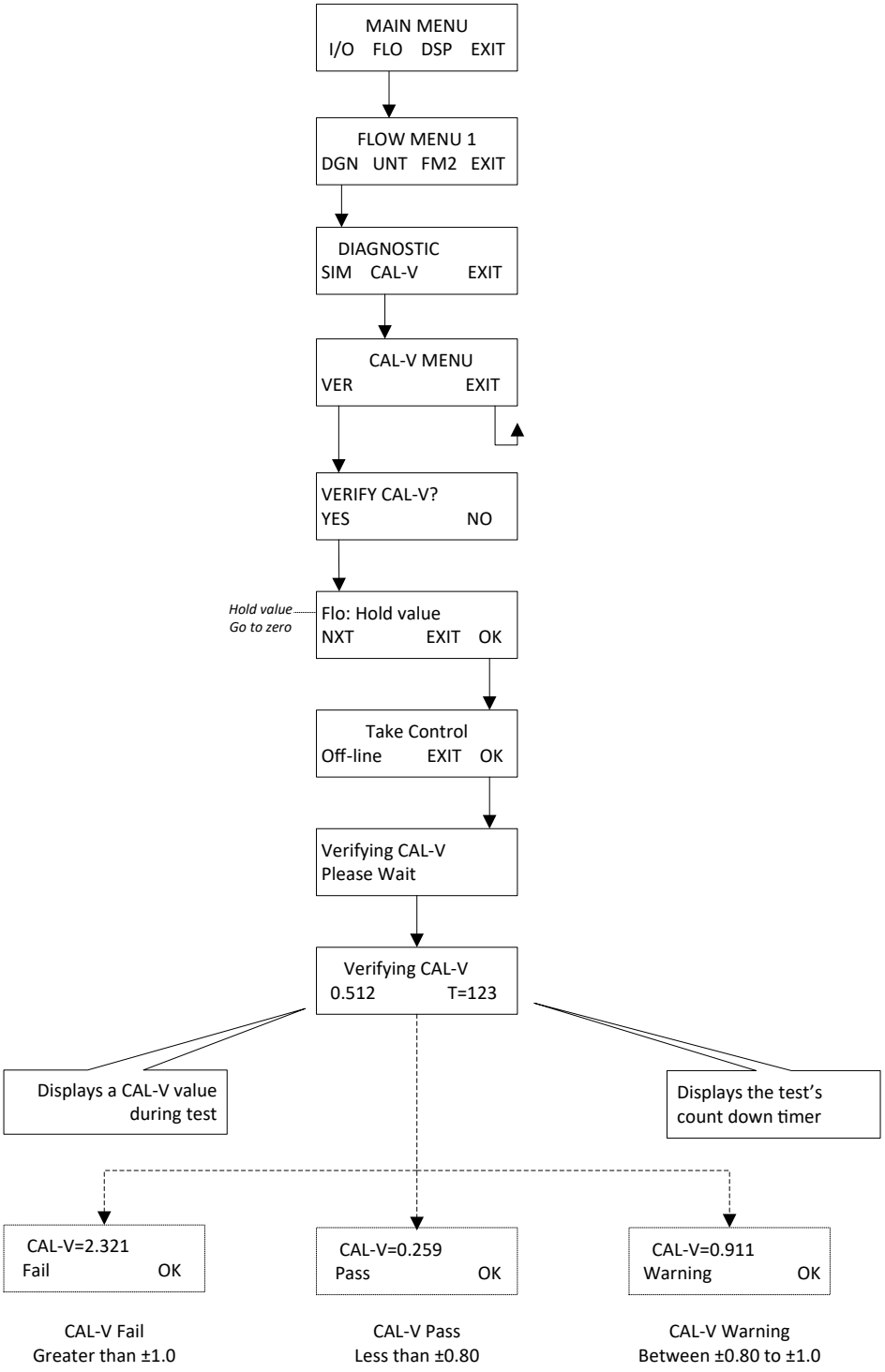

Fig. 1.7: FT1 Menu Tree - Gas-SelectX® Menu

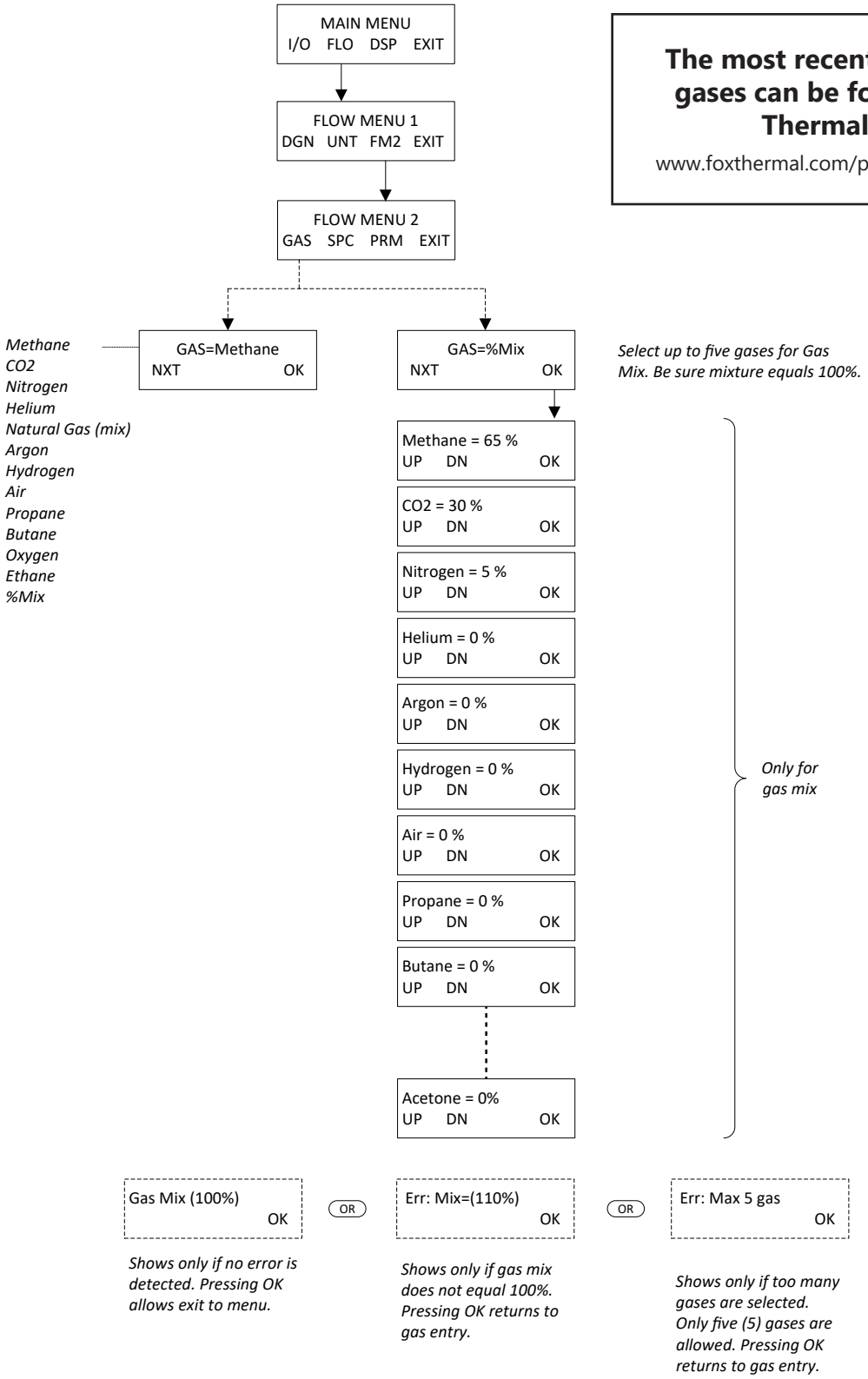

The most recent list of available gases can be found on the Fox Thermal website:

www.foxthermal.com/products/FT1#gasSelectX

Fig. 1.8: FT1 Menu Tree - Engineering Screens

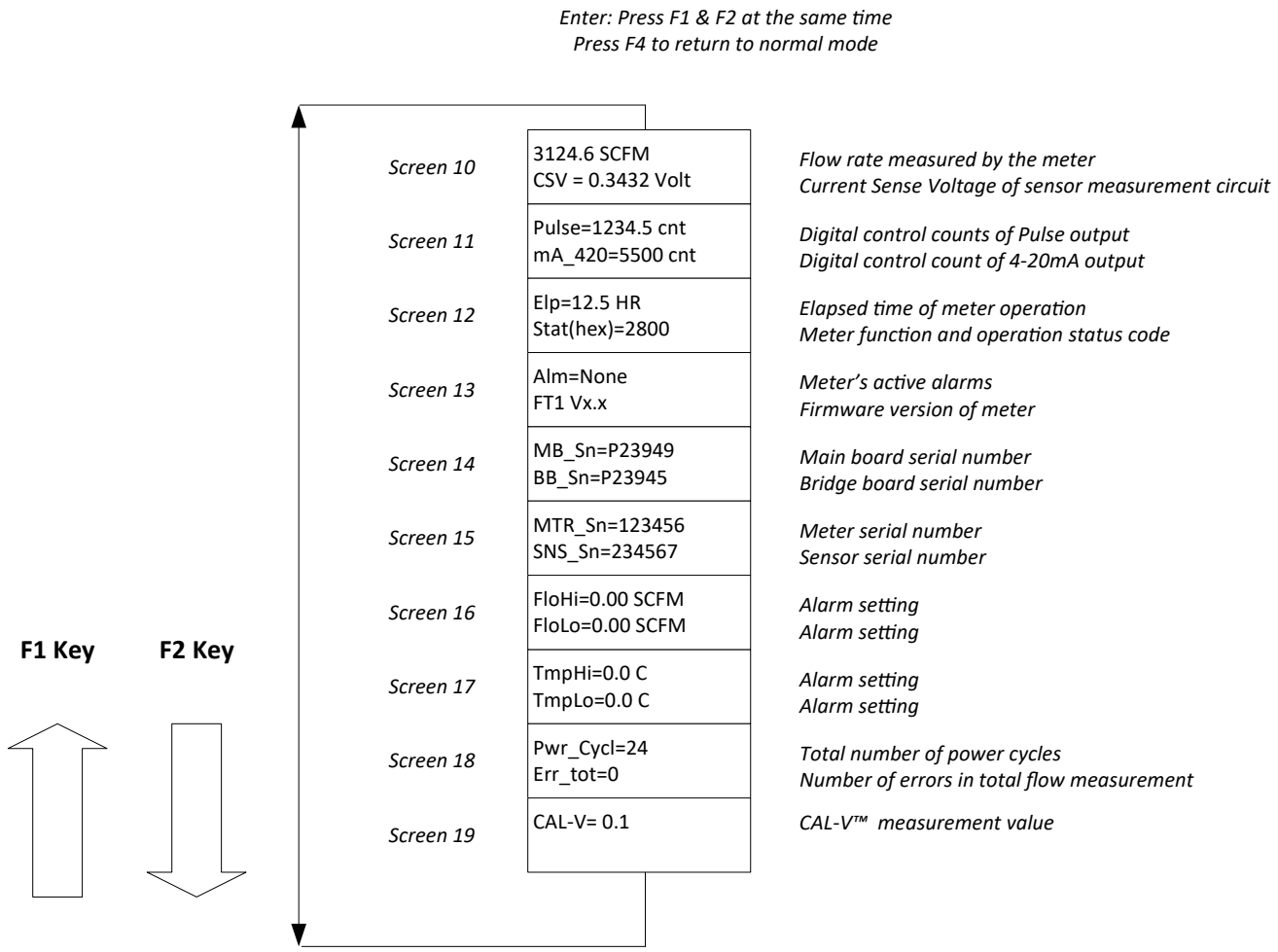

Fig. 1.9: FT1 Menu Tree - Reset Flow Total

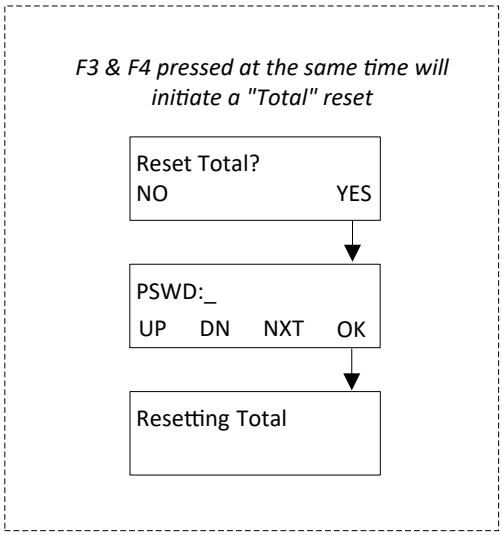

Welcome
Thank you for purchasing the FT1 thermal gas mass flow meter from Fox Thermal. The FT1 is one of the most technically advanced flow meters in the world. Extensive engineering effort has been invested to deliver advanced features, accurate measurement performance and outstanding reliability.

This instruction manual contains the electrical and mechanical installation instructions as well as details for programming, maintaining and troubleshooting the meter. This manual is divided into the following sections: Introduction, Installation, Wiring, Operation, Communications, Maintenance, Appendices, Definitions, and Index.

Theory of Operation
The FT1 is an innovative thermal mass gas flow meter and temperature transmitter. It is microprocessor-based and field programmable. The FT1 thermal sensor operates on the law that gases absorb heat. A heated sensor placed in an air or gas stream transfers heat in proportion to the stream's mass velocity. There are two sensor elements. One sensor element detects the gas temperature and a second element is maintained at a constant temperature above the gas temperature. The energy transferred from the heated element is proportional to the mass flow velocity. The FT1 flow meter maintains accurate flow measurement over a large temperature and pressure range.

Mass Flow
The FT1 measures mass flow; an advantage over other flow meters which measure volumetric flow rate. Volumetric flow is incomplete because temperature and pressure are unknown and must be measured separately. For example, the mass flow of a gas depends on its temperature and pressure. As temperature and pressure changes, the gas volume changes but not its mass. Therefore a device measuring mass flow is independent of temperature and pressure changes. The FT1 provides a direct measurement of gas flow in mass units (kg/hr, lb/hr), standard units (SCFM, SLPM) or normal units (NM3/hr, NLPM) with no additional temperature or pressure measurements required.

Calibration Validation
Validate the calibration of the FT1 in the field using the CAL-V™ test. The goal of Calibration Validation is to provide operators with the ability to verify that the meter is capturing accurate data at scheduled recalibration times - or at any time - instead of sending the meter back to the factory for recalibration. By performing CAL-V™ in the field, operators can verify that the meter is running accurately by testing the functionality of the sensor and its associated signal processing circuitry. This test can be done in the pipe under normal process conditions.

Flow Calibration
Every Fox Thermal flow meter is set to the customer's configuration at the factory using an App ID which is generated by the on-line configurator. The App ID specifies the gas type, flow range, serial communication and other settings in the meter. If these settings match the final customer application, the meter is ready to use. The Fox Thermal Calibration Lab maintains instrument calibration data on every flow meter. Calibration files include details on process conditions, customer gas, line size and other information. All NIST-traceable equipment utilized for the calibration procedure is identified on the Calibration Certificate, which is sent with every flow meter.

DDC-Sensor™ Technology Description
The Fox Thermal DDC-Sensor™, a Direct Digitally Controlled sensor, is a state-of-the-art technology unlike other thermal flow sensors available on the market. Instead of using traditional analog circuitry, the DDC-Sensor™ is interfaced directly to the FT1 microprocessor for more control, precision, and programmability. The DDC-Sensor™ quickly and accurately responds to changes in process variables by utilizing the microprocessor to determine mass flow rate, totalized flow, and temperature.

Fox Thermal's DDC-Sensor™ provides a technology platform for calculating accurate gas correlations. The FT1 correlation algorithms allow the meter to be calibrated on a single gas in the factory while providing the user the ability to select other gases in the Gas-SelectX® gas menu. Fox Thermal's FT1 with its DDC-Sensor™ and state-of-the-art correlation algorithms provide an accurate, multi-gas-capable thermal gas flow meter.

I/O Description
The FT1 features a galvanically isolated 4-20mA analog output with HART communication option on the first channel. The second channel can be a pulse/alarm output, or a serial communication option for Modbus RTU (RS485) or BACnet MS/TP (RS485). There is also a USB port for interfacing with a laptop or computer.

Software
Fox Thermal offers two powerful software solutions: FT1 View™ and ModbusView™. These applications provide users with efficient access to meter measurement data, configuration settings, Gas-SelectX® settings and CAL-V™ functions using a laptop or PC. ModbusView™ can interface with FT1 meters that have the Modbus serial communication option. FT1 View™ connects through the USB port of FT1 meters. Both software applications are available for download on the Fox Thermal website.

FT1 Functional Diagram

An optional on-board 2 line x 16 character backlit LCD display shows flow rate, total flow, elapsed time, process gas temperature, and alarms. The display is also used in conjunction with the Configuration Panel for field configuration of flow meter settings such as gas selection, 4-20mA scaling, pulse output scaling, pipe area, flow cutoff, flow filtering, display configurations, diagnostics, communication parameters, and alarm limits.

Fig. 1.10: FT1 Function Diagram

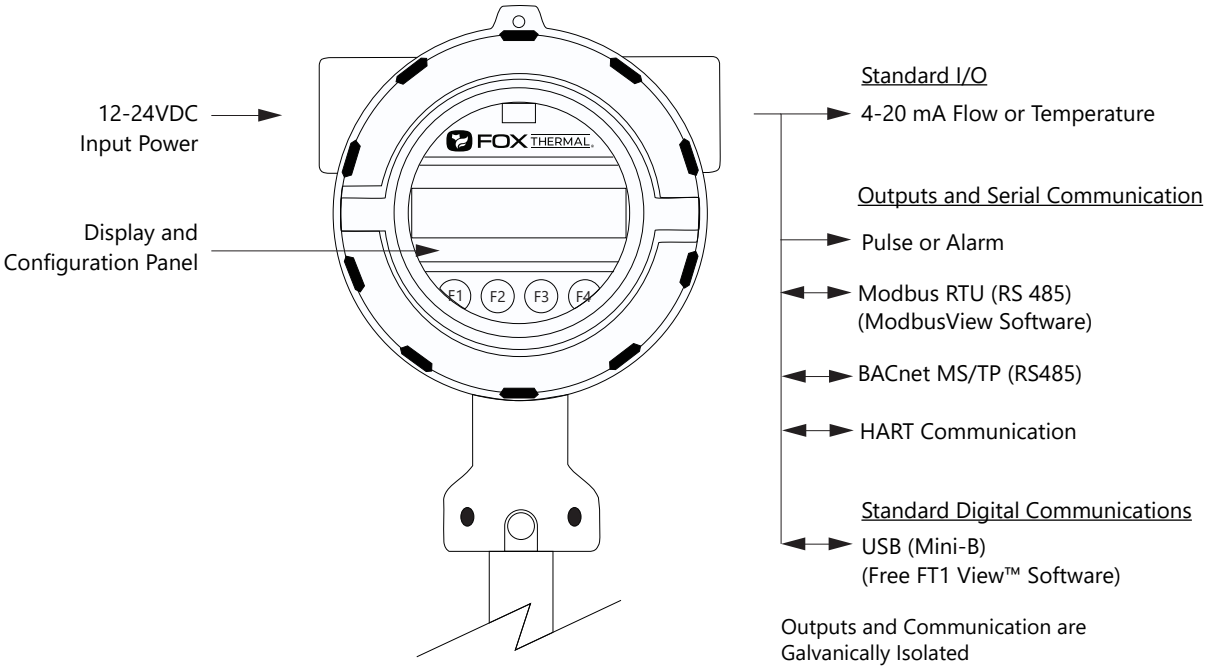

Installation Scope
This section describes how to install the Fox Thermal FT1 Flow Meter and how to get started. Installation methods will vary according to the flow meter type (insertion or inline).

For Insertion Types:

1. Determine lateral position on the pipe.
2. Determine radial position of probe if moisture or condensation is present in the gas.
3. Verify sensor installation depth.
4. Determine sensor orientation in relation to sensor length and direction of flow.
5. Determine if the display orientation must be changed.
6. Ensure proper tightening of compression fitting for mounting meter.

For Inline Types:

1. Determine lateral position on the pipe.
2. Ensure the correct flow body orientation in relation to direction of flow in pipe.
3. Determine if the display orientation must be changed.
4. Ensure proper tightening of compression fitting for mounting meter.

Installation procedures must be performed using a combination of the end user's best engineering practices, in compliance with local codes, and with manufacturer's recommendations.

General Precautions
The following general precautions should be observed:

1. Exercise care when handling the flow meter to avoid damaging the probe, sensor or enclosure.
2. Close any unused conduit openings in the enclosure with plugs certified for your application.
3. The enclosure cover must be closed except during installation or configuration.
4. Mounting FT1 in direct sunlight can cause the temperature inside the enclosure to increase beyond design limits, resulting in failure of LCD display and reduced component life. It is recommended that a sunshade be installed to avoid direct sunlight (see maximum enclosure operating temperature specification).
5. Ensure the flow direction indicator/pointer for the meter is in line with the direction of flow in the pipe.
6. Do not install the FT1 enclosure near an igniter, igniter-controller or switching equipment.
7. Do not install an external power supply in a cabinet containing an igniter controller or switching equipment.
8. For accurate flow measurement, review flow meter placement instructions before installation to ensure a proper flow profile in the pipe.
9. For safety reasons, Teflon ferrules are only appropriate for applications with pressures of 60 psig or less. At higher pressures, use of a Teflon ferrule risks unwanted probe movement or ejection of the probe from the pipe. For all applications above 60 psig, the standard stainless steel ferrule is required.

Instructions for Flow Meter Lateral Placement
Install the FT1 flow meter so that it is far enough away from bends in the pipe, obstructions, or changes in line sizes to ensure a consistent flow profile. See Fig. 2.1 below for your meter type.

Fig. 2.1: Upstream and Downstream Pipe IDs for Insertion and Inline Flow Meters

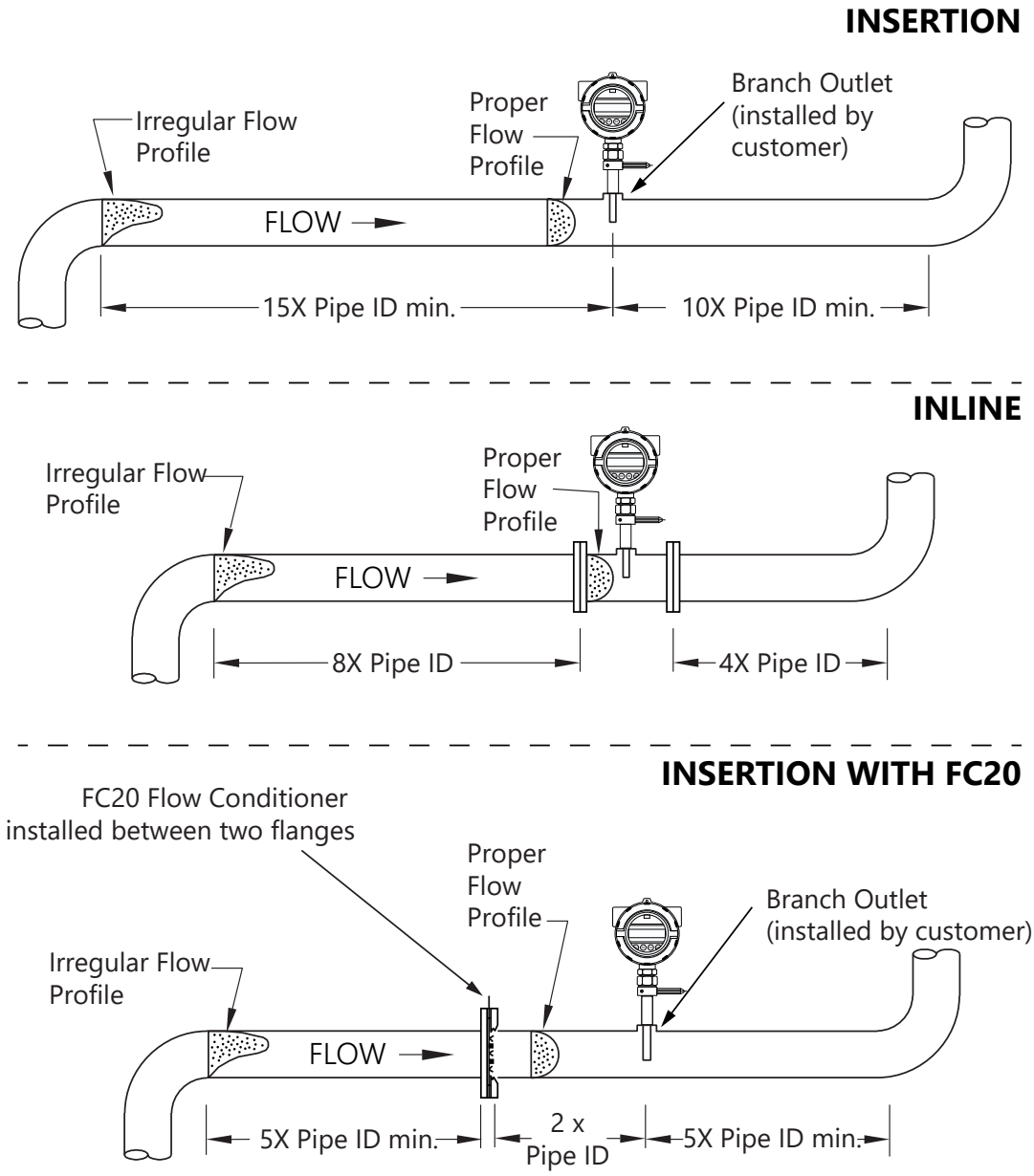

NOTE!
- Pipe ID = Inside Diameter
- The probe diameter is ¾" (standard) or ½" (optional)
- An irregular flow profile will affect sensor accuracy
- See FC20 Installation Instructions (document # 109193) for more information

Radial Probe Position - Moisture or Condensation in the Gas
The radial position of the meter may help reduce collection of moisture on the sensor. Condensing liquids accumulating on the meter's sensing elements will disrupt accurate flow measurement. Fox Thermal recommends the flow meter be used in dry gas conditions whenever possible for highest accuracy. Contact Fox for further recommendations.

Fig. 2.2: Installation at 180º

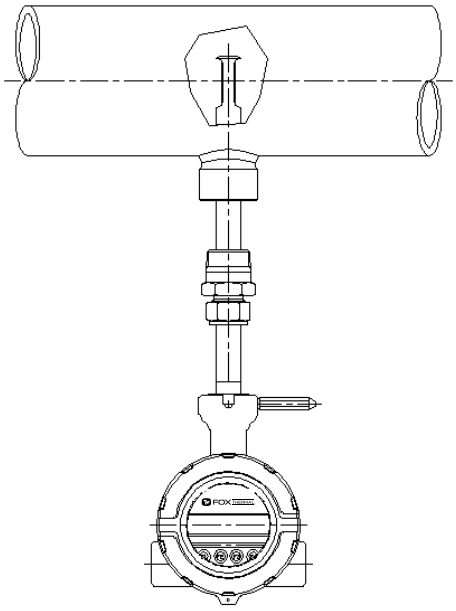

Alternate Installations - Vertical Pipes or Restricted Installation Spaces
When restricted physical installation space exists, the FT1 can also be installed at other angles. Please note that the display and the enclosure orientation can be rotated in 90º increments.

Fig. 2.3: Alternate Installation at 90º (CCW)

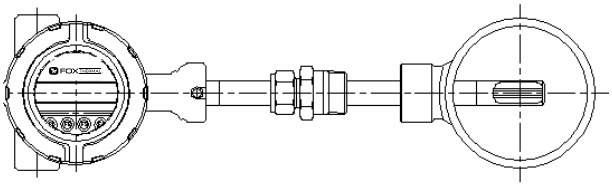

Welding Branch Fitting to Pipe

The probe of the FT1 must be installed perpendicular in the pipe to measure flow accurately. Use the following steps to ensure that the branch fitting is correctly welded to the pipe.

Directions:

1. Drill a hole through one wall of the pipe. The hole must be 0.781" (25/32") for the 3/4" diameter probe or 0.531" (17/32") for the 1/2" diameter probe option.
2. Assemble the compression fitting and branch fitting hand tight onto the probe of the FT1.
3. Insert the probe into the hole in the pipe and use the FT1 probe and compression fitting to align the branch fitting with the hole and the probe perpendicular to the pipe.
4. Tack-weld the branch fitting carefully onto the pipe.
   - Before welding the fitting completely, verify the probe is aligned to the center of the pipe and the hole is centered in the branch fitting (see Figure 2.4).
5. To verify that the correct position has been achieved, carefully slide the probe in and out of the branch fitting and hole.

WARNING! Do not force the probe through the hole. Forcing it through the hole can damage the probe.

6. Verify that the temporary weld of the branch fitting positions the probe window on the pipe's centerline.
   - The picture on the right side of Figure 2.4 shows an incorrect welding of the branch fitting, causing the probe to be "off center".
7. Once the branch fitting is aligned properly, remove the probe from the branch fitting and seal weld the fitting all the way around. Then verify the probe is still aligned with the center of the pipe.
8. Set the depth of the flow meter (see "Fig. 2.5: Insertion Sensor Depth in Pipe" on page 23).
   - Do not tighten compression fitting until proper depth of flow meter is determined. See Fig. 2.5.

Fig. 2.4: Alignment of Branch Fitting

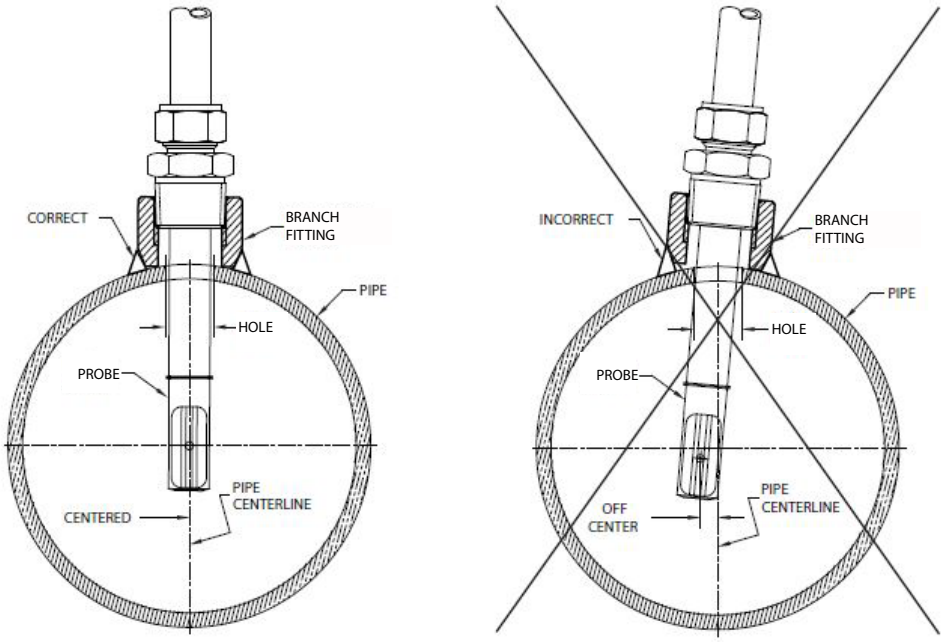

Installation Depth

The installation depth of the sensor in the pipe is dependent on the pipe size. To get the most accurate reading, proper placement of the sensor window within the pipe is necessary. As shown in Fig 2.5, the end of the sensor window should be 0.73" (18.5 mm) past the center line of the pipe. Review the dimensional drawing below with the following equation to calculate insertion depth:
L +D/2 + .73" = insertion depth.
Insertion depth is measured from the top of the compression fitting to the bottom end of the probe.

CAUTION! For a 1½" pipe, do not tighten compression fitting without 0.2" distance from wall or damage to probe will occur.

See page 26 for instructions on how to tighten the compression fitting.

Fig. 2.5: Insertion Sensor Depth in Pipe

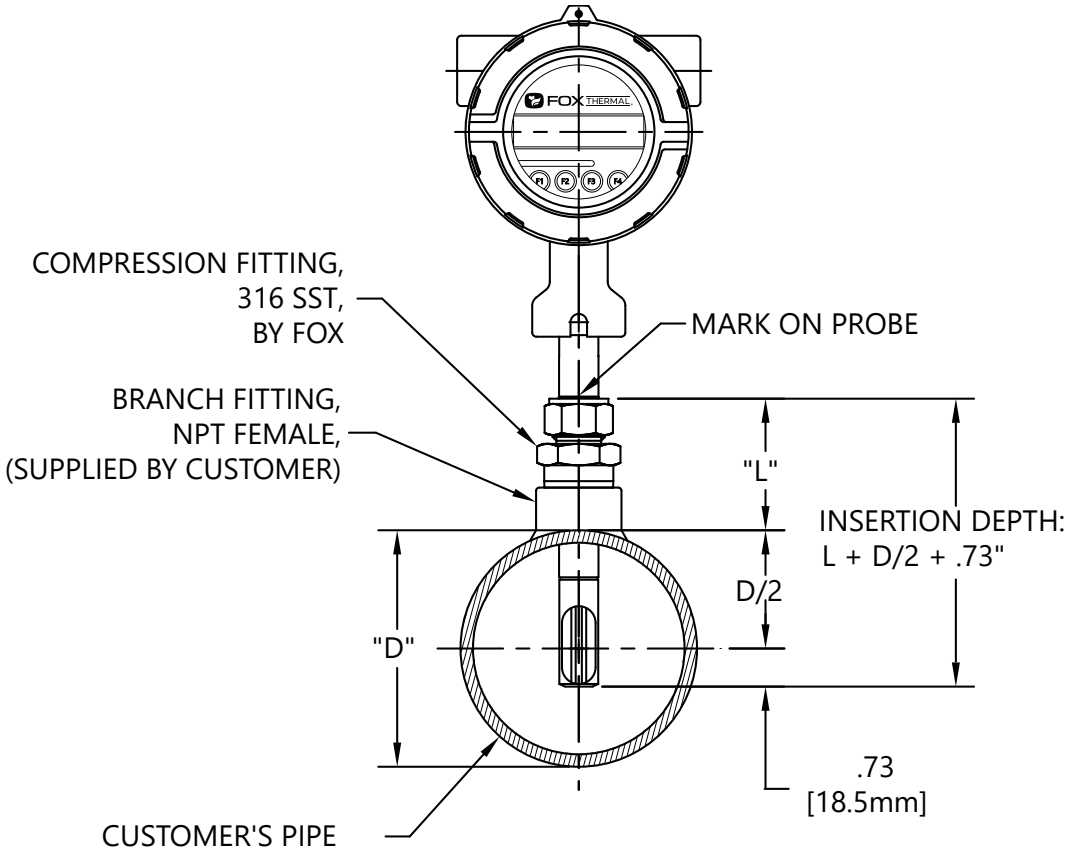

Rotating the Enclosure
The FT1 enclosure has been designed to allow the enclosure to rotate for optimal viewing of the display. To rotate the enclosure, first loosen the two set screws near the Flow Direction Indicator, then unscrew and remove the flow direction indicator. Rotate the enclosure into the desired position, reinstall the flow direction indicator pointing in the direction of flow, and tighten the set screws. Do not rotate the enclosure more than 360 degrees.

Direction of Flow and Orientation of the Probe
Install the meter with the flow direction indicator pointing in the direction of flow and centered on the middle of the pipe. The rotational misalignment of the flow direction indicator must be less than 2 degrees.

Fig. 2.6: Orientation of Flow Meter

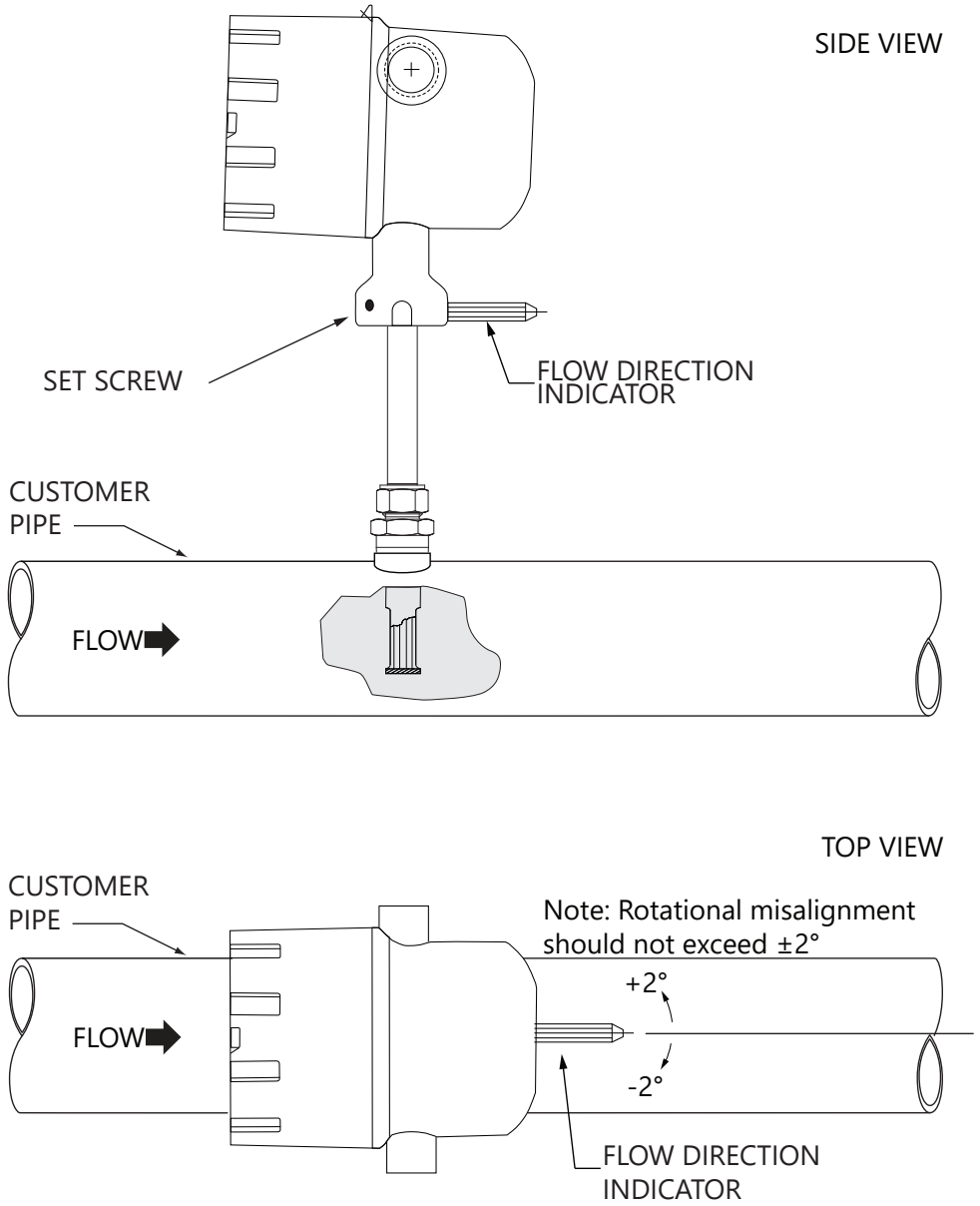

Changing the Orientation of the FT1 Display

The optional display can be rotated in 90° increments for optimum viewing of the screen. First, open the enclosure by unscrewing the enclosure cap and loosen the two captive screws to open the display assembly. Detach the display board from the metal shield by loosening the three screws on the back of the round shield. Rotate the display board to the desired orientation. Ensure that the display cable is routed flat and straight through the display hinge to prevent binding. Reattach the display board to the metal shield by tightening the three screws. Close the display assembly and secure it to the enclosure with the two captive screws. Finally, install the enclosure cover back on the front of the enclosure.

Fig. 2.7: Rotating the Display Orientation

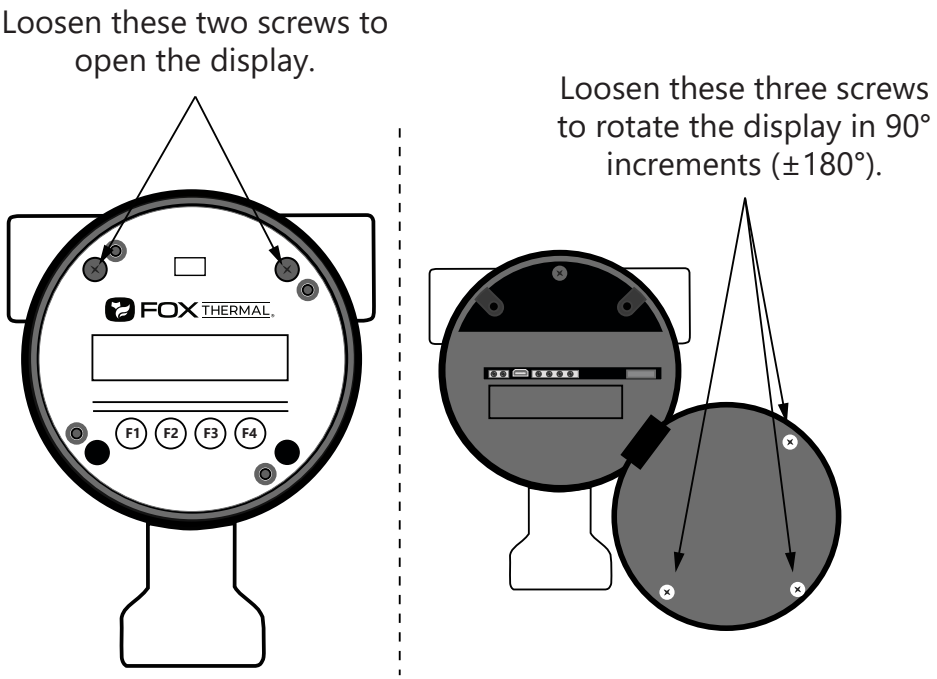

Mounting Instructions - Compression Fittings

The FT1 insertion style flow meters are mounted through a hole and a female NPT branch outlet in the customer's pipe. Insertion style flow meters are not designed for use in pipes smaller than 1½".

- Install the compression fitting into the 1-inch female NPT branch outlet.
- When installing in a 2" pipe or larger, install the end of the probe 0.73" (18.5 mm) past the center line of the pipe (refer to figure 2.5).
- When installing into a 1½" pipe carefully install the probe into the pipe until it touches the opposite wall and pull back 0.2".
- Rotate the nut finger-tight.
- Further tighten the nut just enough until the tube will not turn by hand or move axially in the fitting.
- Mark the nut at the 6 o'clock position
- While holding the fitting body steady, tighten the nut one and one-quarter (1 ¼) turns to the 9 o'clock position. See Figure 2.8.

Fig. 2.8: Proper Tightening of the Compression Fitting Nut

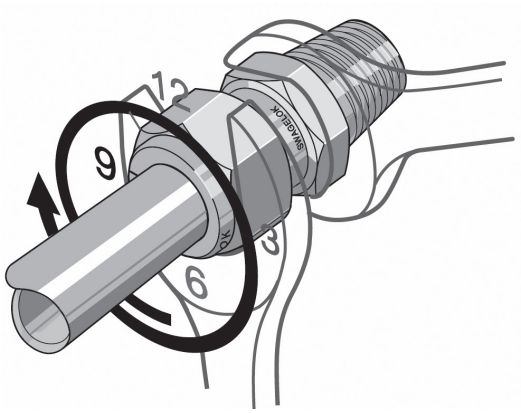

NOTE! Before removing a probe with compression fitting, mark the tube at the back of the nut, and mark a line along the nut and fitting body. Use these marks when reinstalling the probe. Reference the instructions on p. 27.

NOTE! When installing a probe with compression fitting that has been tightened previously, use the instructions on p. 27.

CAUTION! For a 1½" pipe, do not tighten compression fitting without 0.2" distance from wall or damage to probe will occur.

CAUTION! Once the stainless steel compression fitting ferrule is locked onto the probe, the probe can be removed or rotated, but the insertion depth is locked in place.

CAUTION! If the stainless steel or Teflon ferrules are not properly tightened, and/or the recommended pressure is exceeded, the ferrules can slip on the stainless steel tubing causing damage to the meter or bodily harm.

Mounting Instructions - Compression Fittings (Inline and Insertion Meters Previously Installed)
In cases where a compression fitting has already been swaged in an inline flow body or an insertion meter, use the following procedure.

- Carefully insert the probe with swaged ferrules into the fitting until the front ferrule seats against the fitting (see Figure 2.9).
- Verify that the probe is installed the correct depth in the pipe (refer to Figure 2.5 on p. 23).
- Rotate the nut with a wrench until the probe and nut are in their previously marked positions, or you feel a significant increase in resistance (see Figure 2.9).
- Tighten the nut slightly (approximately 1/8 turn).

Fig. 2.9: Proper Re-Tightening of the Compression Fitting Nut

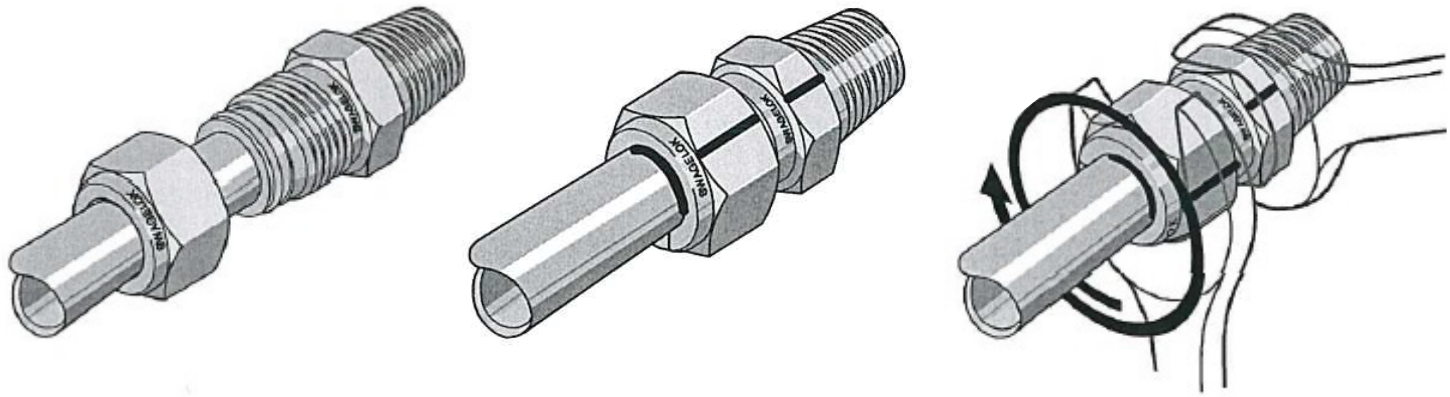

CAUTION! Do not use a gap inspection gauge with reassembled fittings.

Installation of a New Retractor Assembly

1. Remove collar clamp from probe using a 3/16" Hex Key.
2. Remove meter probe from retractor assembly and leave the ball valve open. Keep the collar spacer on the probe so it is not misplaced. The retractor clearance table of Figure 2.12 lists the space required to remove the meter from the retractor. Use the model code of your meter to determine the dimension.
3. Install the valve assembly on the pipe, by tightening the Hex Nipple with a wrench.

Fig. 2.10: Retractor Assembly With and Without Probe Installed

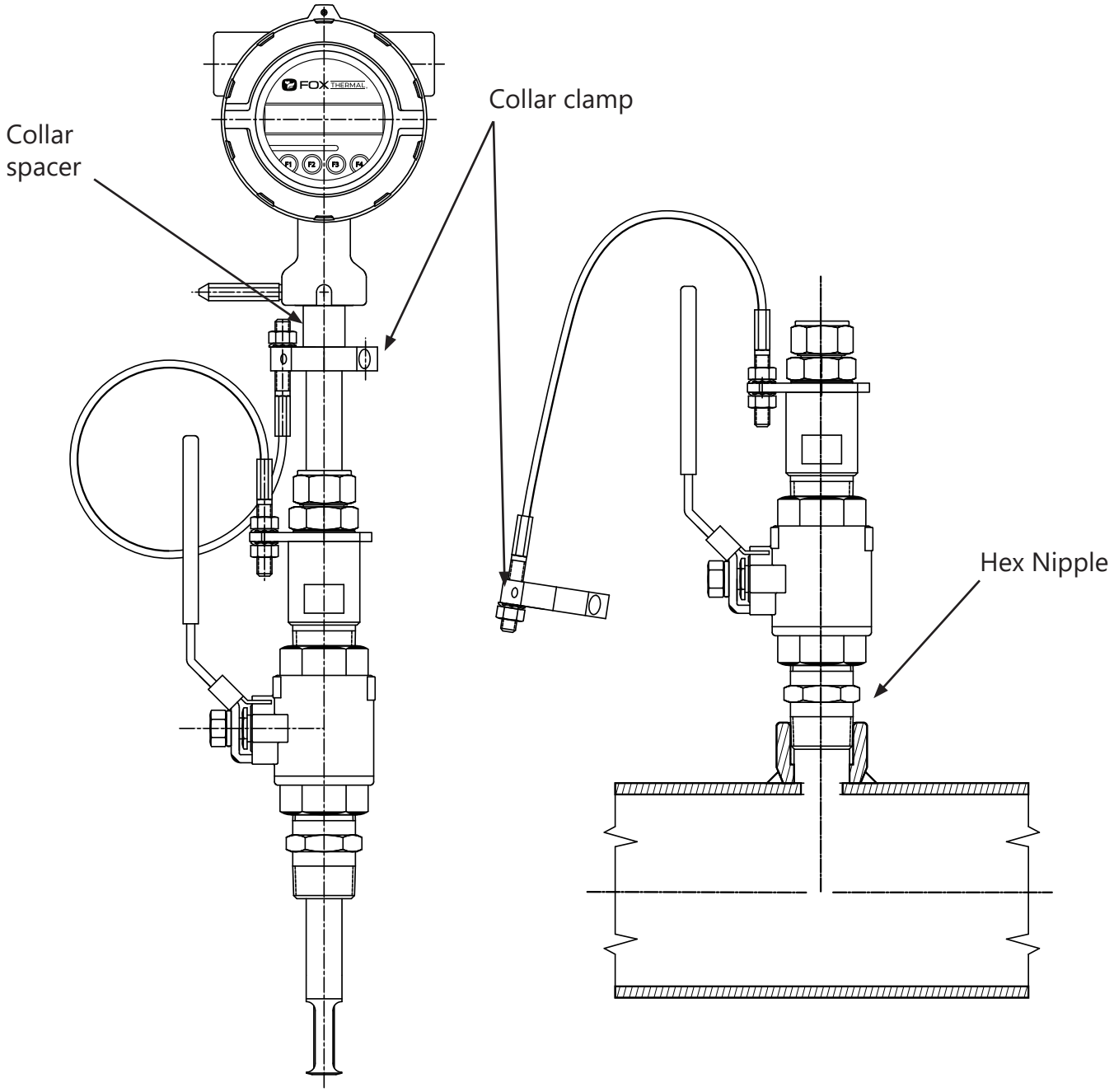

4. Carefully slide the probe through the retractor assembly and through the hole to see if there is interference by carefully touching the pipe wall with the end of the probe on the far side or until the probe cannot go deeper. Remove the probe and retractor, and rework the hole, if required.

Fig. 2.11: Verify Probe Insertion

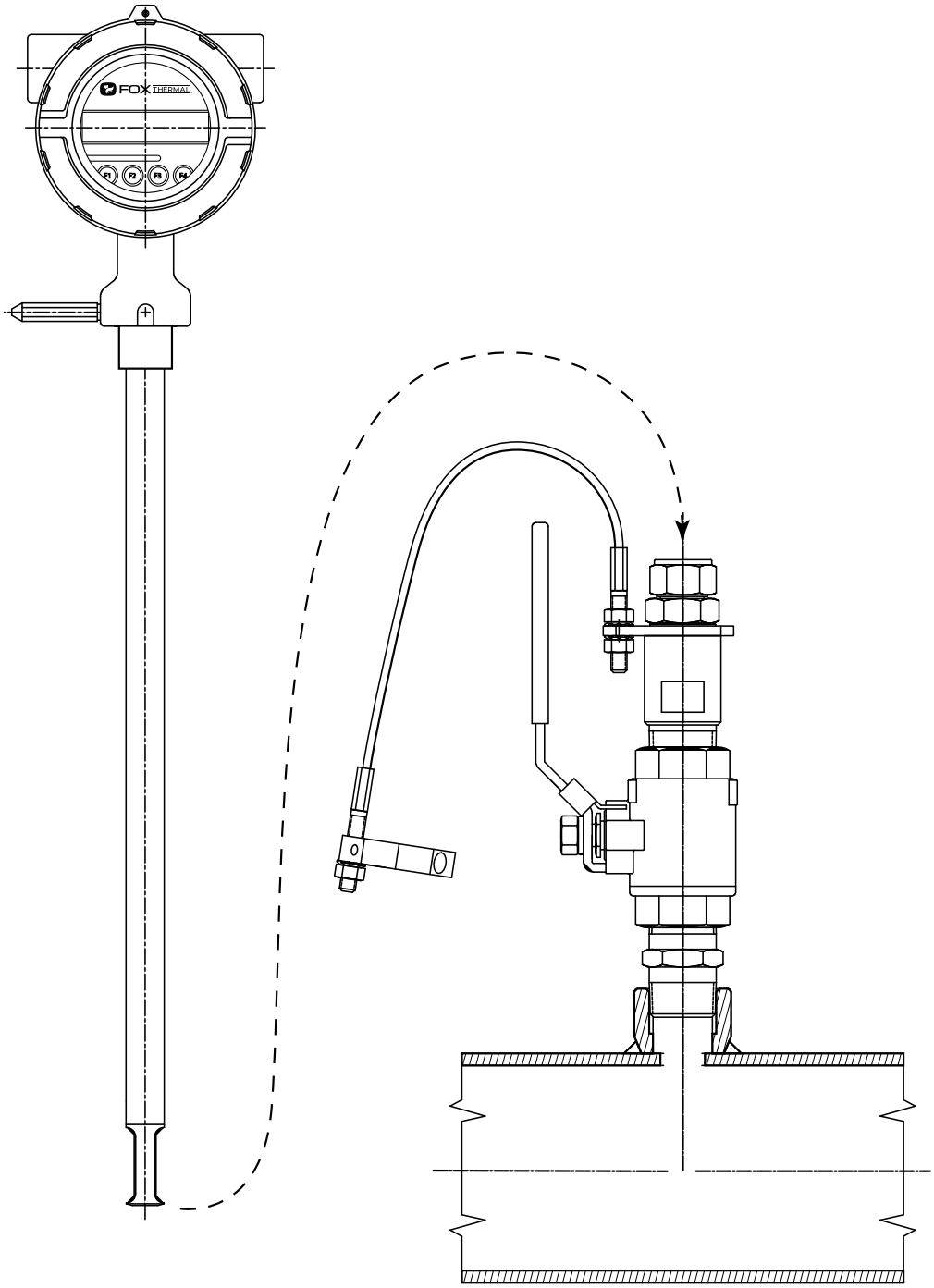

5. The installation depth of the sensor is dependent on the pipe size. To get the most accurate reading, proper placement of the sensor window within the pipe is necessary. As shown in Figure 2.12, the end of the sensor window should be 0.73" (18.5 mm) past the center line of the pipe. Review the dimensional drawing below, use equation (L + D/2 + 0.73") to calculate insertion depth and mark it on the probe.
6. The Retractor Clearance table of Figure 2.12 lists the space required to remove the meter from the retractor. Use the model code of your meter to determine the dimension.

Fig. 2.12: Determining and Marking Insertion Depth

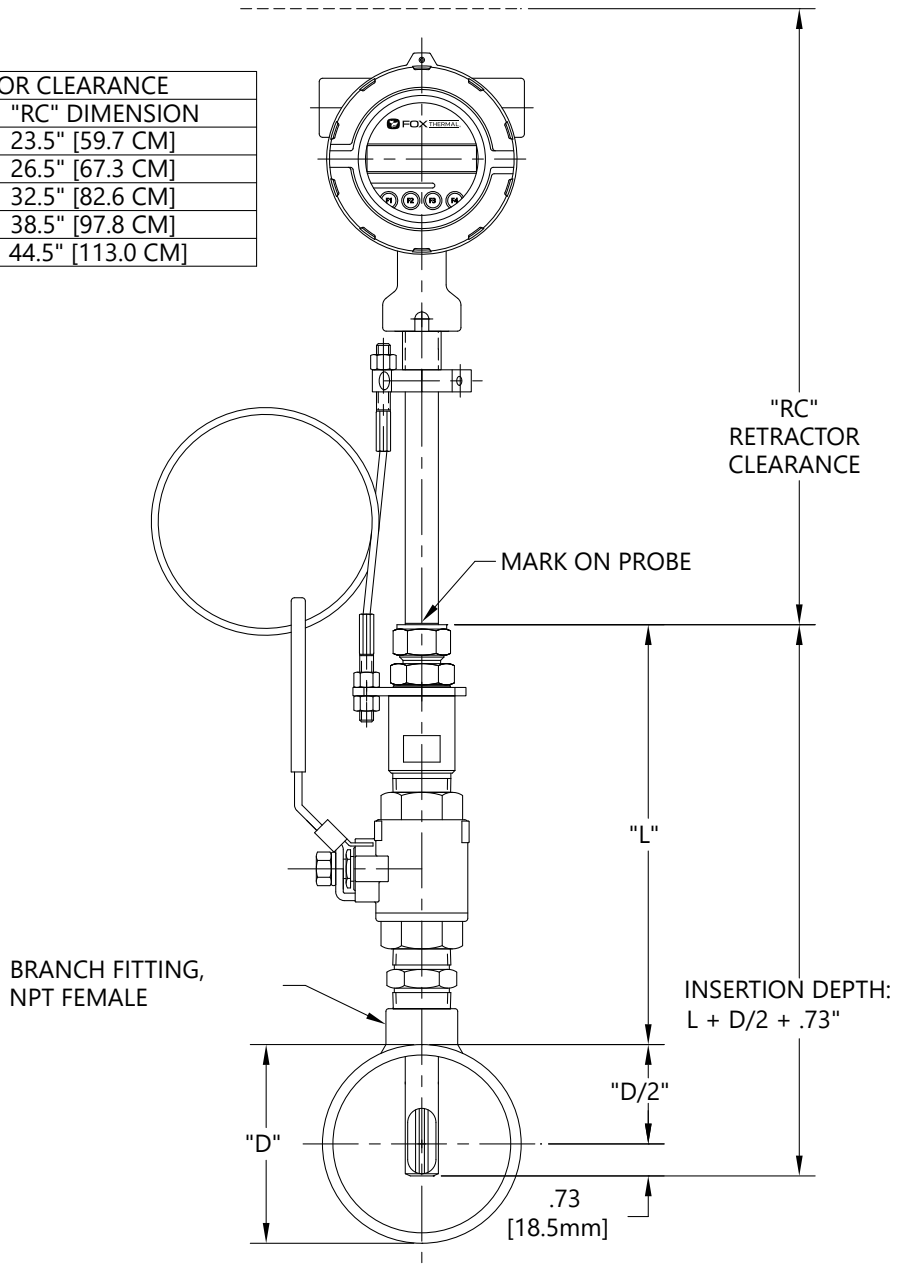

RETRACTOR CLEARANCE	
CODE	"RC" DIMENSION
15R	23.5" [59.7 CM]
18R	26.5" [67.3 CM]
24R	32.5" [82.6 CM]
30R	38.5" [97.8 CM]
36R	44.5" [113.0 CM]

7. Insert probe back into the retractor to the depth mark and hand-tighten the compression fitting. Make sure collar spacer is in place on the probe.
8. Verify that flow direction indicator is in line with pipe and in the direction of flow.
9. Fully tighten compression fitting (refer to the instructions on p. 26).
10. Install collar clamp back on probe just below the collar spacer. Install collar so that the cable mounting hole is in line with the mounting hole on the bracket.

Fig. 2.13: Installed Retractor

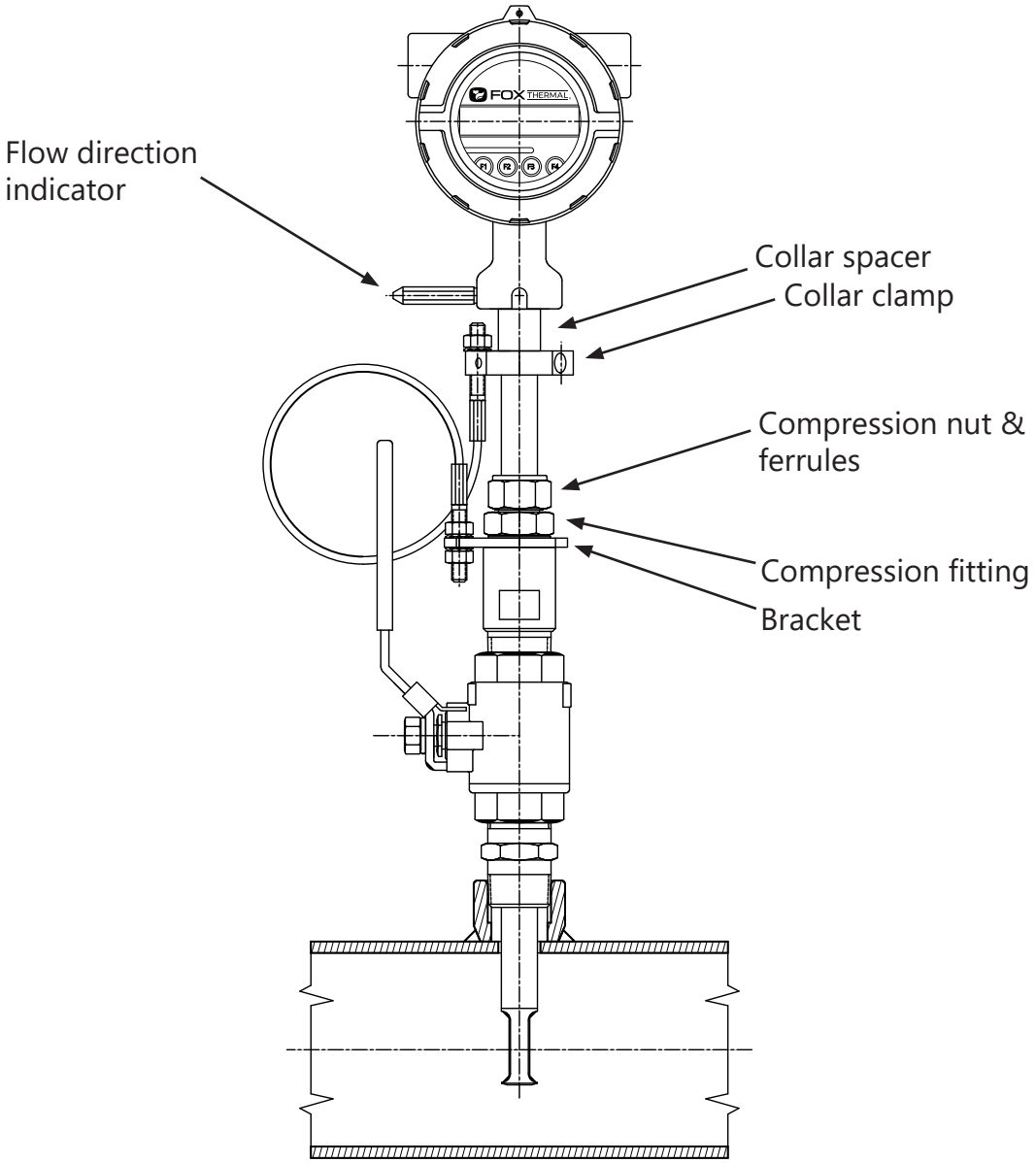

NOTE! For instructions on how to properly remove and replace the meter from a retractor, please refer to "Instructions for Removing and Inserting the Meter from a Pressurized Pipe using the Retractor" on page 91.

Wiring Instructions
To wire the FT1 connect the power and signal wires to the terminal blocks according to the label and instructions on the following pages.

Fig. 3.1: FT1 Wiring Access

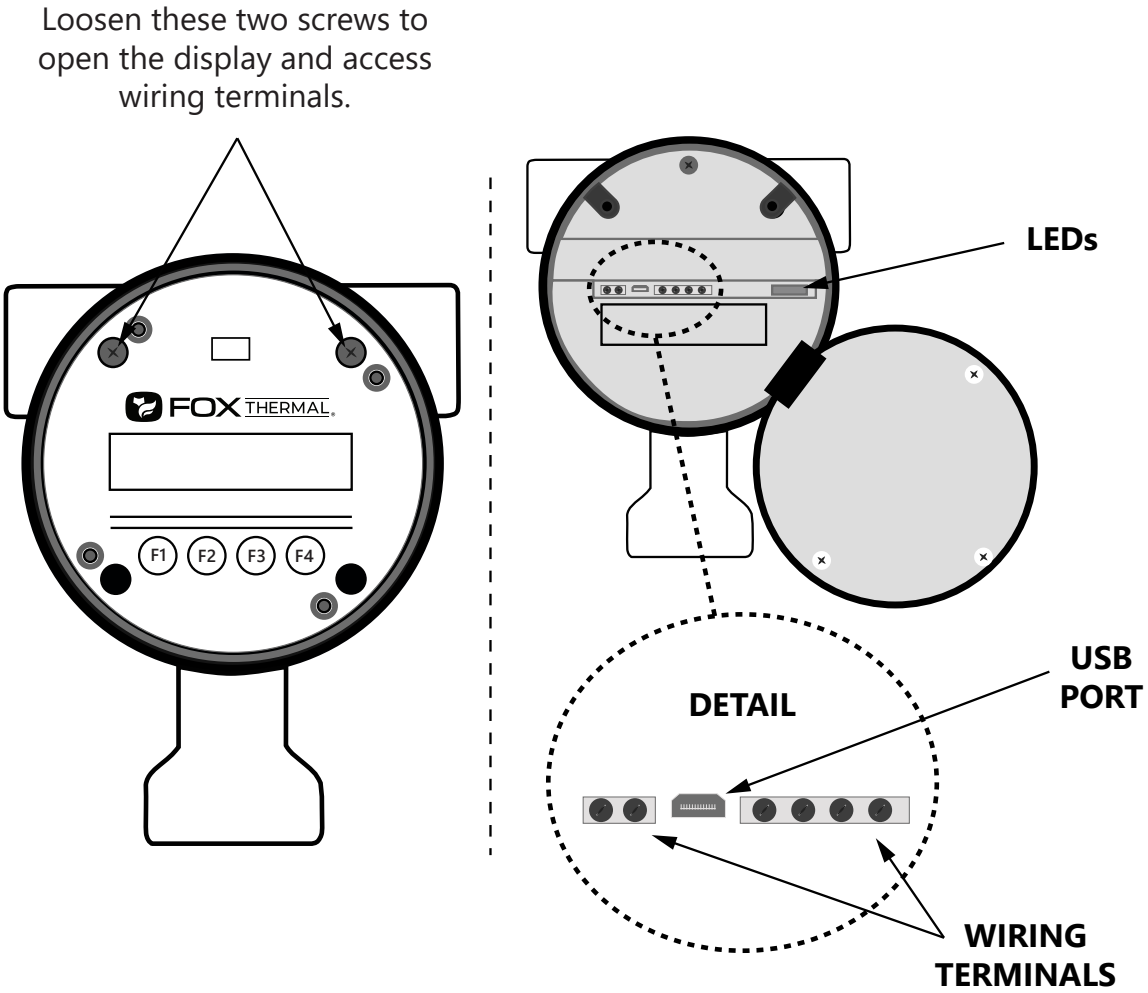

To wire the FT1, unscrew and remove the enclosure cap. Loosen the two captive screws on the display assembly and rotate it open to access the wiring terminals. Connect the power and signal wires to the terminal blocks according to the label and instructions on the following pages.

Cut all wires as short as allowable for a minimum service loop. Obtain the correct length for the FT1 wires using one of these methods:
- Conduit not connected to meter: 6" of wires exposed from end of conduit
- Conduit connected to meter: extend wire beyond enclosure face (w/o cover) +2.5"

Wiring Precautions

WARNING!

- DO NOT OPEN THE ENCLOSURE WHEN ENERGIZED OR AN EXPLOSIVE ATMOSPHERE IS PRESENT.
- Connect earth ground to chassis ground screw on the inside of FT1 enclosure.
- All plumbing and electrical installations of flow meters must be in compliance with local codes, the end user's best engineering practices, and manufacturer's recommendations.
- Do not install the FT1 enclosure near an igniter, igniter-controller or switching equipment to eliminate the possibility of noise interference.
- Do not install an external power supply in a cabinet containing an igniter controller or switching equipment.
- This flow meter contains components that can be damaged by static electricity. You must discharge yourself by touching a grounded steel pipe or other grounded metal prior to working inside this flow meter.
- Close any unused conduit openings with suitable certified plugs

Power Wiring

For wiring the 12 to 24VDC power, use stranded copper wire. Twisted pair shielded cable is recommended. Supply connection wiring must be rated for at least 90°C.

Grounding

The enclosure must be properly grounded with a quality earth ground. 16 gauge, stranded wire is recommended. For US and Canada installation, the internal ground terminal on the enclosure must be used. Use of the external ground terminal is optional.

Signal Wiring

For signal wiring, the recommended wire gauge is 18 to 22 AWG. Always use twisted pair shielded cable. Cable shields should be connected to a good earth ground at one end only.

Modbus Serial Communication Wiring

A shielded 22 to 18 gauge three conductor cable is recommended for Modbus communication wiring. Two of the wires in the cable should be twisted pair and used for the Modbus transmit and receive signals. The third wire is for the Modbus common signal. The shield drain wire of the cable should be connected to chassis or earth ground at the Modbus modem. Belden number 3106A or a similar type of cable is recommended, depending on the environment or temperature requirements of the application.

Power Input Requirements: 12 to 24VDC
External DC power supply must provide 12 to 24VDC (10 to 30VDC full input power range) at 6 Watts minimum.
(With 12VDC power, the FT1 can use up to 500mA. With 24VDC power, the FT1 can use up to 250mA.)

A 20 Watt or greater power supply is recommended to ensure it can provide enough current under all temperature, ventilation, and power on conditions.

The enclosure must be properly grounded with a quality earth ground. Sixteen (16) gauge, stranded wire, is recommended for earth ground. For US and Canada installation, the internal ground terminal on the enclosure must be used. Use of the external ground terminal is optional.

Connect the power wiring as shown in the diagram below.

Fig. 3.2: Connections for 12 to 24VDC Supply

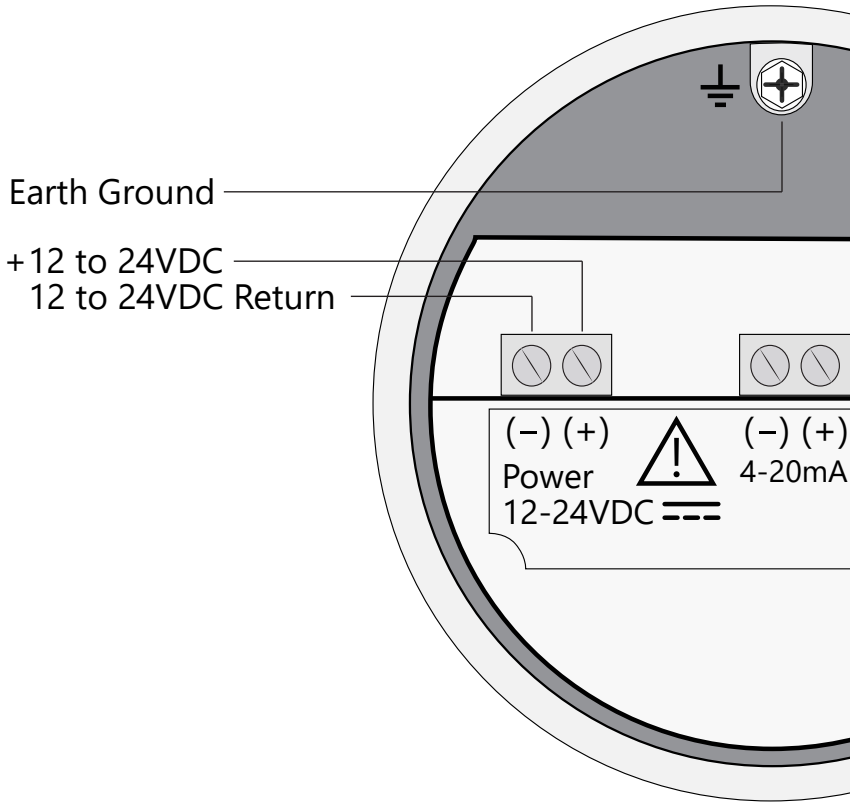

CAUTION!
- Supply connection wiring must be rated for at least 90°C.

4-20mA Output Wiring: Customer-Supplied Power Source (Recommended)
Bring the wiring in through either conduit hub. Connect the 4-20mA flow rate, 4-20mA temperature, and HART communication option wiring as shown in the diagram below.

Fig. 3.3: 4-20mA Output Wiring for Isolated Customer-Supplied Power Source

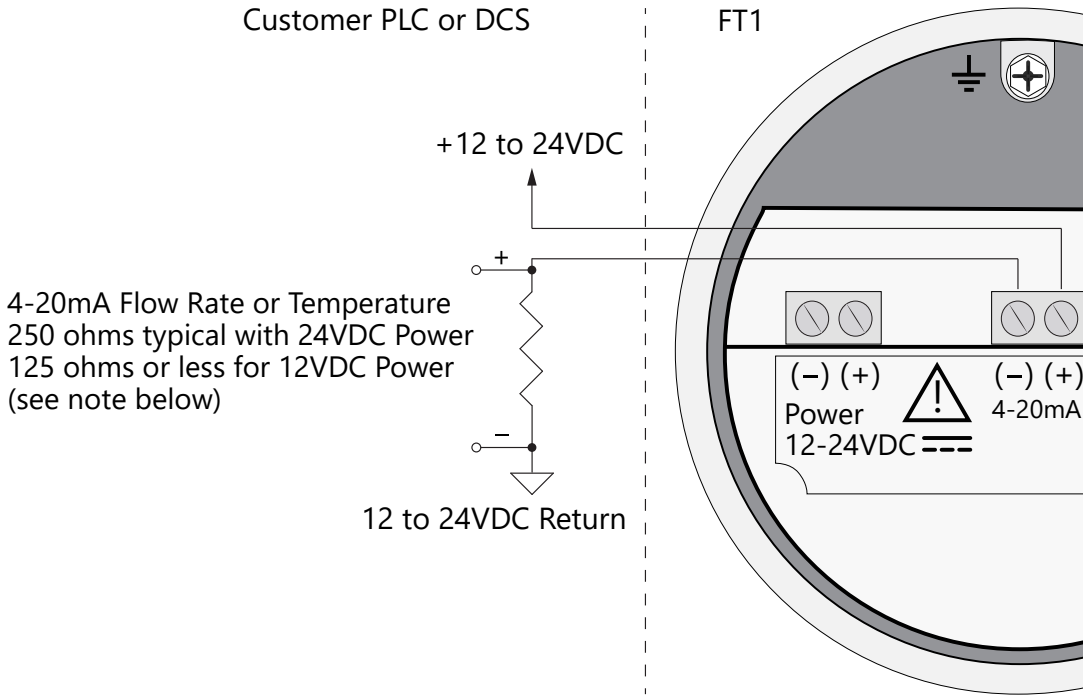

NOTE!
- When using a 12 volt power supply, the load resistor on the 4-20mA output must be 125 ohms or less to operate properly.
- When using 24 volt power, the load resistor is typically 250 ohms. A 250 ohm resistor in the 4-20mA circuit will result in a 1 to 5 volt signal to the PLC or DCS.
- When using a 24 volt power supply, the load resistor on the 4-20mA output must be 600 ohms or less.
- Some PLC and DCS equipment have built in load resistors, please refer to the technical manuals of the equipment.

4-20mA Output Wiring: Loop Power Provided by FT1
Bring the wiring in through either conduit hub. Connect the 4-20mA flow rate, 4-20mA temperature, and HART communication option wiring as shown in the diagram below.

Fig. 3.4: 4-20mA Output Wiring for Loop Power Provided by FT1

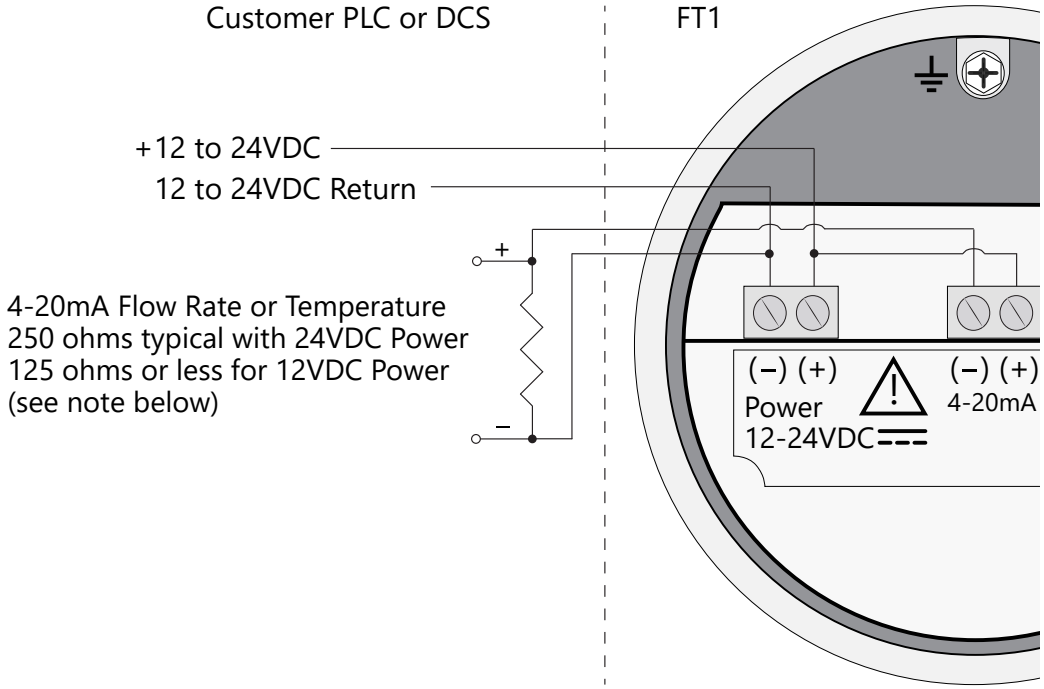

NOTE!
- When using a 12 volt power supply, the load resistor on the 4-20mA output must be 125 ohms or less to operate properly.
- When using 24 volt power, the load resistor is typically 250 ohms. A 250 ohm resistor in the 4-20mA circuit will result in a 1 to 5 volt signal to the PLC or DCS.
- When using a 24 volt power supply, the load resistor on the 4-20mA output must be 600 ohms or less.
- Some PLC and DCS equipment have built in load resistors, please refer to the technical manuals of the equipment.

Pulse/Alarm Output Wiring: Customer Supplied Power Source (Recommended)
Bring pulse/alarm wiring in through either conduit hub. Connect the pulse/alarm wiring as shown in the diagram below. The pulse/alarm output is an open collector circuit capable of sinking a maximum of 20mA of current. Pulse or alarm selection is programmed using the display or FT1 View™. Only one option, pulse or alarm, can be active at a time.

Fig. 3.5: Pulse/Alarm Output Isolated (Recommended)

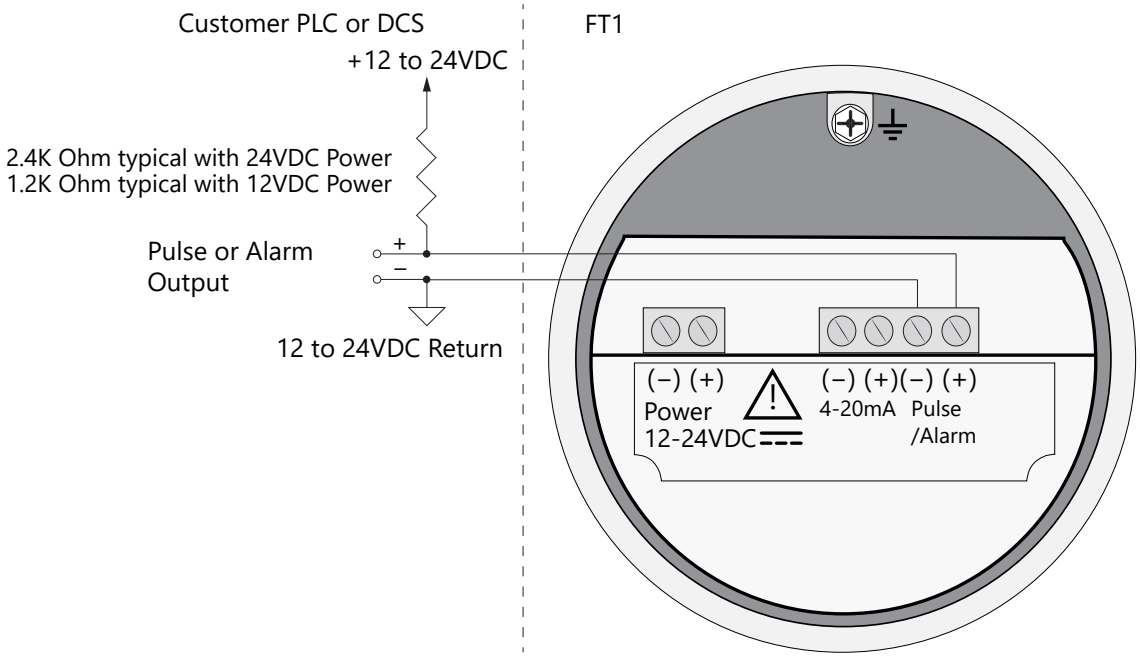

NOTE!

- The FT1 Pulse/Alarm output is typically used to drive digital circuitry or solid-state relays. The output of a solid state relay may, in turn, operate loads such as electromechanical relays or alarm indicators.
- The maximum load current of the Pulse/Alarm output is 20mA. Choose a load resistance that provides approximately 10mA with the power supply operating voltage.
- When the output is configured for Alarm and an alarm is not active, the output will be on (0 volts output). When an alarm is active, the output will be off (12 to 24 volts output).
- In order to use the Pulse/Alarm feature on the FT1, this feature must be chosen when the meter is ordered from the factory. Pulse output not available with meters ordered with Modbus RTU (RS485) and BACnet MS/TP (RS485).

Pulse/Alarm Output Wiring: Power Provided by FT1

Bring pulse/alarm wiring in through either conduit hub. Connect the pulse/alarm wiring as shown in the diagram below. The pulse/alarm output is an open collector circuit capable of sinking a maximum of 20mA of current. Pulse or alarm selection is programmed using the display or FT1 View™. Only one option, pulse or alarm, can be active at a time.

Fig. 3.6: Pulse/Alarm Output Power Provided by FT1

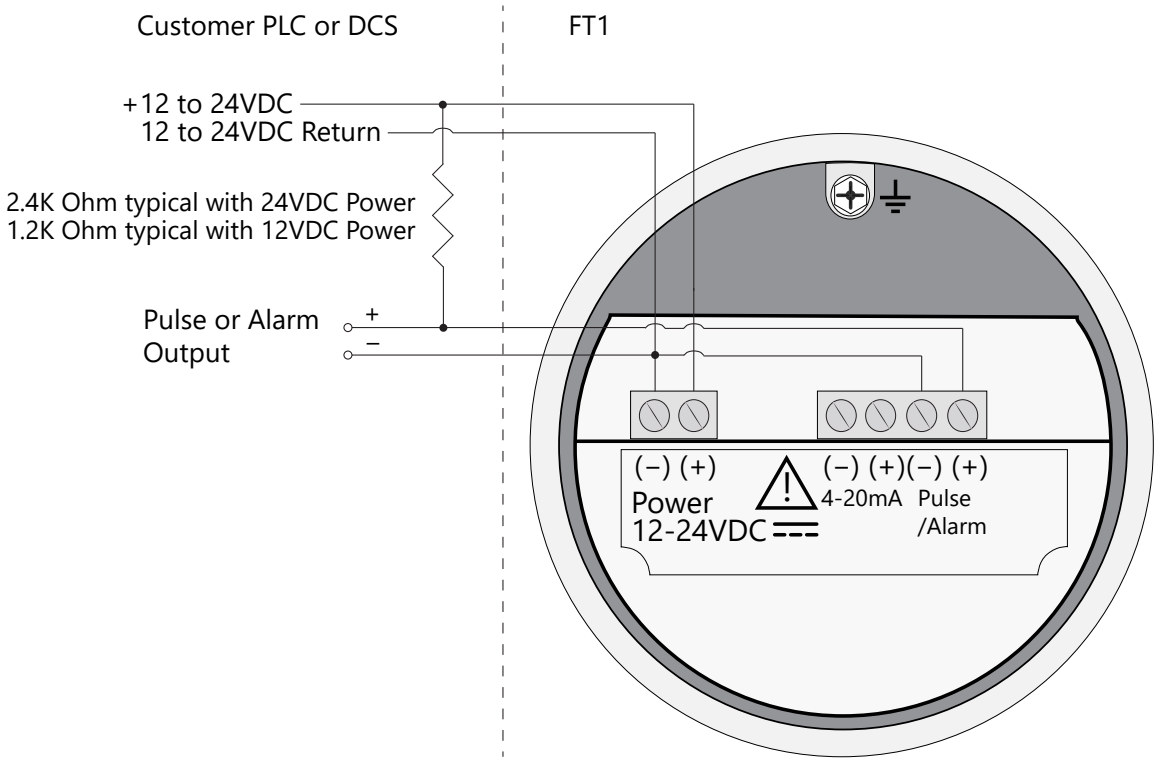

NOTE!

- The FT1 Pulse/Alarm output is typically used to drive digital circuitry or solid-state relays. The output of a solid state relay may, in turn, operate loads such as electromechanical relays or alarm indicators.
- The maximum load current of the Pulse/Alarm output is 20mA. Choose a load resistance that provides approximately 10mA with the power supply operating voltage.
- When the output is configured for Alarm and an alarm is not active, the output will be on (0 volts output). When an alarm is active, the output will be off (12 to 24 volts output).

RS485 Wiring for Modbus RTU or BACnet MS/TP
Wiring connections are made as shown in the diagram below for Modbus communication.

Termination Resistor
Connect a termination resistor across the receive/transmit signals of the last device on the communication line. To connect the 121 ohm termination resistor on the FT1, set jumper W1 to the Terminated position, see detail below.

Disconnect the termination resistor on all other external RS485 devices. The termination resistor of the FT1 is disconnected by setting jumper W1 to the "open" position.

Fig. 3.7: RS485 Wiring

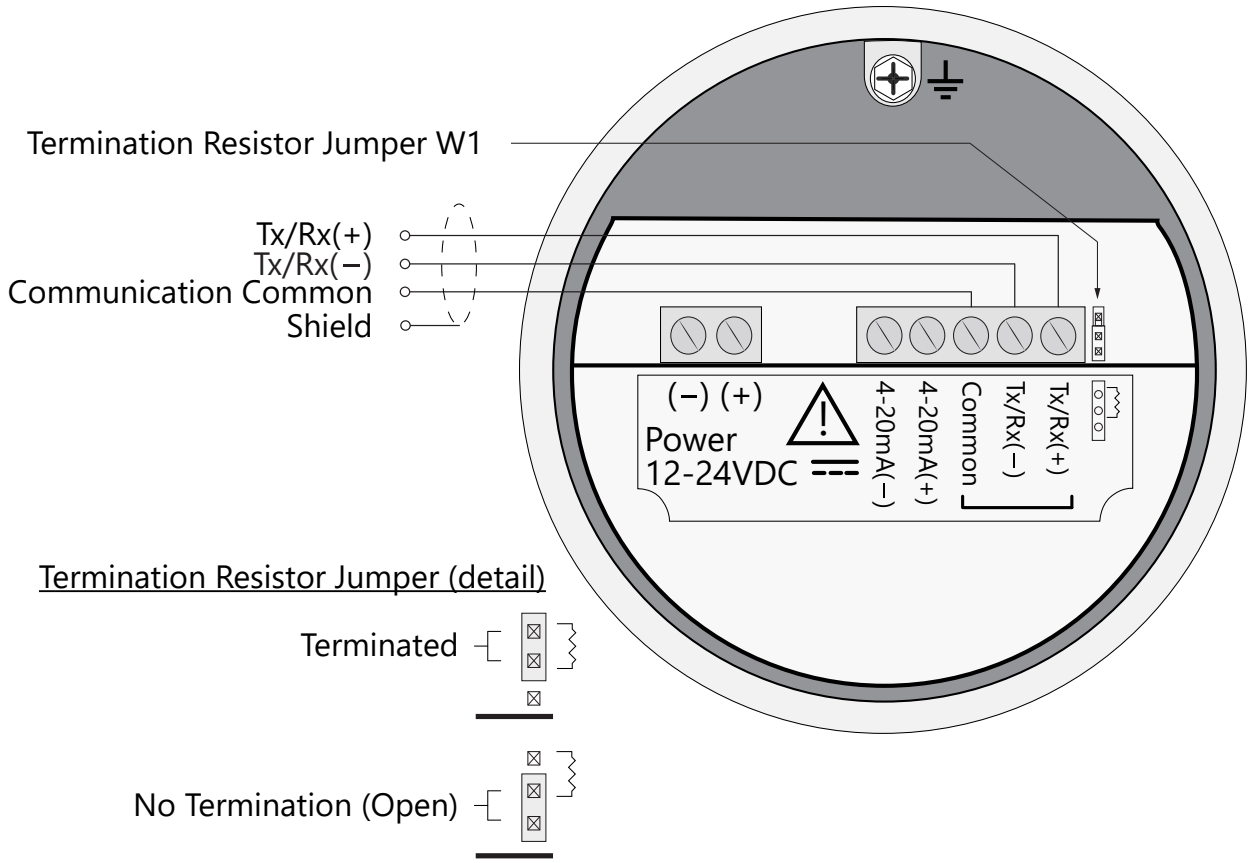

NOTE!
- In order to use the RS485 feature on the FT1, this feature must be chosen when the meter is ordered from the factory. Modbus RTU and BACnet MS/TP are not available with meters ordered with the Pulse/Alarm option.
- W1 jumper will either be in the open or terminated position. It should be in the terminated position on the last meter in the series.

HART Wiring
The HART connections are made as shown in the diagram below.

NOTE! Meters ordered with HART will be configured for flow as default. If the customer changes the 4-20mA output to temperature, HART should report temperature.

HART 4-20mA Output Wiring: Customer-Supplied Power Source
The 4-20mA current loop and HART modem connections are made as shown in the diagram below.

Fig. 3.8: HART Wiring, Customer-Supplied Power Source

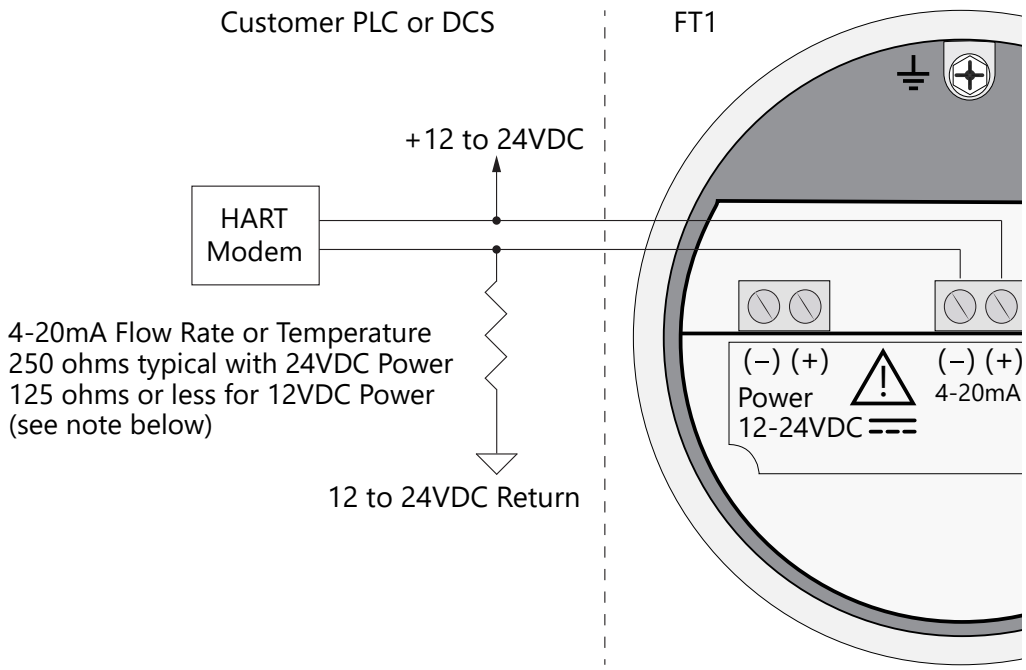

NOTE!
- When using a 12 volt power supply, the load resistor on the 4-20mA output must be 125 ohms or less to operate properly.
- When using 24 volt power, the load resistor is typically 250 ohms. A 250 ohm resistor in the 4-20mA circuit will result in a 1 to 5 volt signal to the PLC or DCS.
- When using a 24 volt power supply, the load resistor on the 4-20mA output ust be 600 ohms or less.
- Some PLC and DCS equipment have built in load resistors, please refer to the PLC/ DCS technical manual.

HART 4-20mA Output Wiring: Handheld Communicator
The 4-20mA current loop connections are made as shown in the diagram below.

A hand-held HART communicator can be connected to test points TP12 (+) and TP13 (-) with clip leads or to the 4-20mA terminal block.

Fig. 3.9: HART 4-20mA Output Wiring, Handheld Communicator

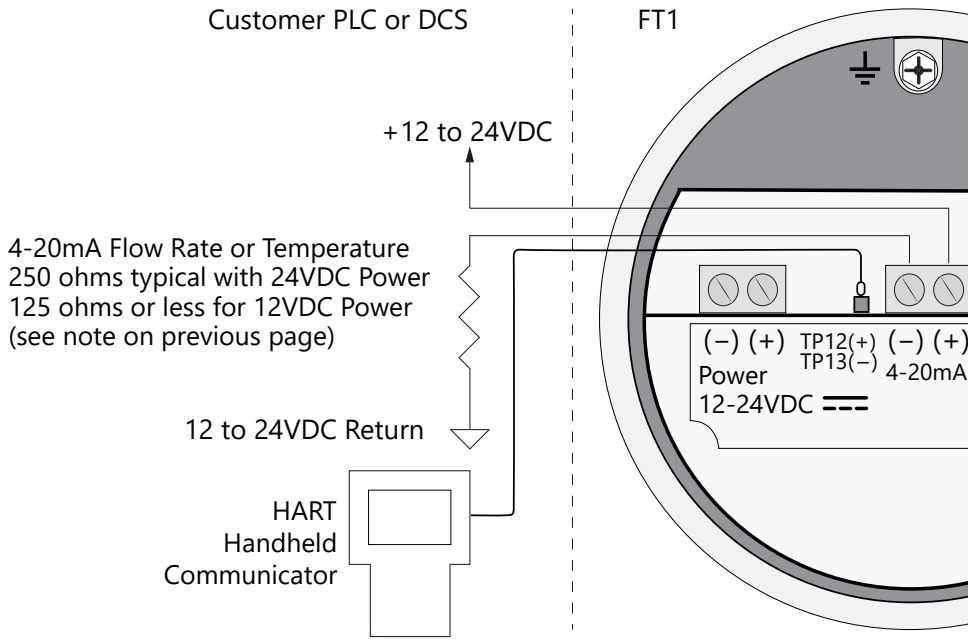

HART 4-20mA Output Wiring: Loop Power Provided by FT1

The 4-20mA current loop and HART modem connections are made as shown in the diagram below.

Fig. 3.10: HART 4-20mA Output Wiring, Loop Power Provided by FT1

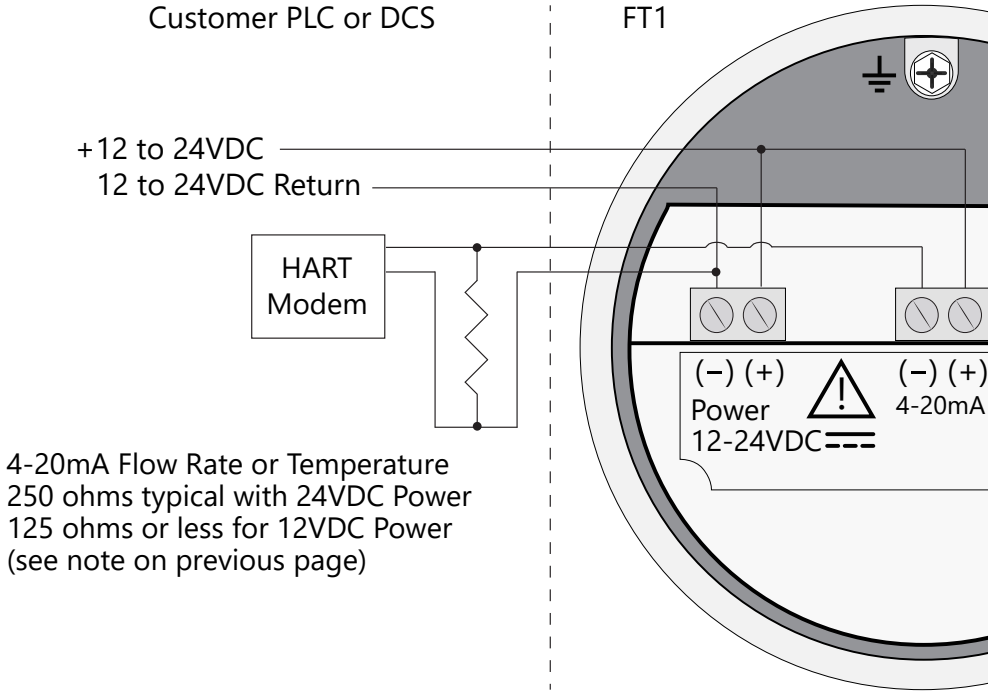

Start Up Sequence
The program automatically enters the Run/Measure mode after power up. The screen will show the firmware version of the FT1 during power up.

USB Interface
The USB interface is a standard feature which allows communication with a PC to monitor readings and configure settings. FT1 View™, is a free application program from Fox Thermal that connects to the USB interface and allows data monitoring, configuration setting, and data logging to Excel.

Software Interface
Fox Thermal offers two powerful software options to enhance your flow meter experience: FT1 View™ and ModbusView™. Both applications provide users with efficient access to meter data and configuration settings, allowing for seamless integration with your laptop, PC, or control station.

FT1 Display and Configuration Panel
The FT1 has an optional 2 line x 16 character display with 4 mechanical buttons. The meter can be programmed by using the display and configuration panel. The configuration panel can be accessed by removing the FT1 cap. Be sure to replace the cap after you are done configuring the FT1.

Fig. 4.1: FT1 Display and Configuration Panel

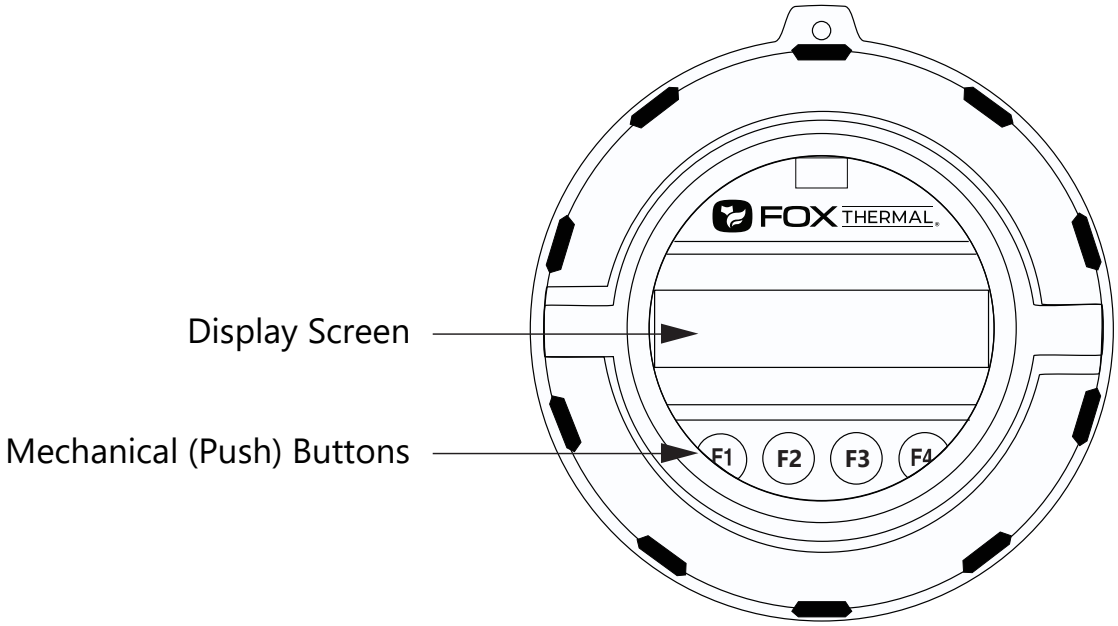

Measurement Mode Display Screens
In the measurement mode, there are four display screens (display 1, 2, 3 and a prompt screen to enter the programming mode). Two display screens are user programmable (refer to Display Setup p. 51). Scrolling through the display is accomplished by pressing the **F1** or **F2** key to view the next or previous screen.

Pressing the **F1** and **F2** keys at the same time enters the Engineering Menu screens (refer to p. 15).

Pressing the **F3** and **F4** keys at the same time brings up the Reset Total screen prompt (see p. 60).

Fig. 4.2: FT1 Measurement Mode Display Screen Navigation

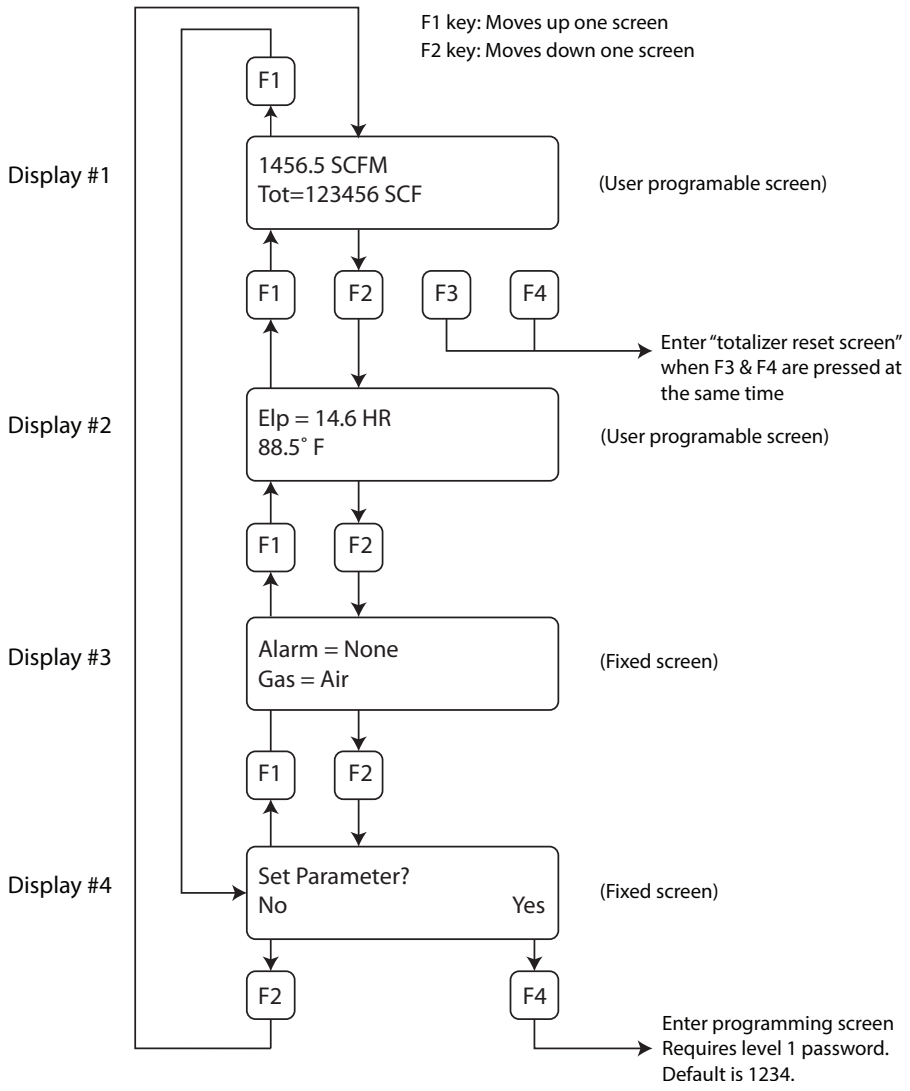

Programming: Data Entry using the Display and Configuration Panel
There are 2 basic types of menu entries: one for changing value or string and one for selecting from a selection list.

To Change a Value or String :

```
VALUE = 0.91234
CHG                    OK
```

F1 F2 F3 F4

Press **CHG (F1)** key to change the value, **OK (F4)** to accept the value.

```
VALUE = 0.91234
UP     DN     NXT    OK
```

F1 F2 F3 F4

Press the **UP (F1) or DN (F2)** key to select a new digit or character, the cursor points to the selected digit. Press **NXT (F3)** to select the next digit and **OK (F4)** to accept the entry.

To Select from a List:

```
FLO UNT = SCFM
NXT                    OK
```

F1 F2 F3 F4

Press **NXT (F1)** key repeatedly until the correct selection is made and **OK (F4)** key to accept the entry.

Entering the Programming Mode
To enter the programming mode and access the Main Menu, press the **F1** or **F2** key in the normal running mode until the following screen is shown:

```
  SET PARAMETERS ?
No                     Yes
```

F1 F2 F3 F4

Press **YES (F4)** and the following screen will prompt user to enter password:

```
PASWD:_
UP     DN     NXT    OK
```

F1 F2 F3 F4

Enter the correct password. The default Level 1 password is “1234”.

If the wrong password is entered, the message “Wrong Password” will display and then return to the programming entry screen.

Main Menu
If the password is accepted, the Main Menu screen will be shown:

```
        MAIN MENU
I/O     FLO     DSP     EXIT
```

F1 F2 F3 F4

This is the Main Menu screen for the programming mode. Press **EXIT (F4)** repeatedly until “Normal Mode” is seen briefly to exit the programming mode.

Analog 4-20mA Outputs
The following menu allows the scaling of the analog 4-20mA output. From the Main Menu, press **I/O (F1)** to move to the 4-20mA output selection. In this screen press **420 (F3)** (screen appearance may vary according to options).

```
    SET         I/O
COM     PUL     420     EXIT
```

F1 F2 F3 F4

The 4-20mA output is programmable for flow or temperature:

```
mA=Flow
NXT                     OK
```

F1 F2 F3 F4

Selections for the 4-20mA output are:
Flow
Temp

Select **NXT (F1)** to select Flow or Temperature and then press **OK (F4)**.

```
20 mA =   3500 SCFM
CHG                     OK
```

F1 F2 F3 F4

Enter the value for the 20mA and press **OK (F4)** key to accept the setting. Then the following screen will display:

```
4 mA =   0  SCFM
CHG                    OK
```

F1 F2 F3 F4

Enter the value for the 4mA and press **OK (F4).**

NOTE! When the flow rate exceeds the programmed value for the 20mA set point, the analog output will stay at 20mA and an alarm code will be generated.

NOTE! 4mA is normally set to 0.

After setting the 4mA output value, choose the mA fault value:

```
mA Fault = Not use
NXT                    OK
```

F1 F2 F3 F4

This menu allows the user to select an alarm fault level on the 4-20mA output. The alarm is activated when a serious issue is detected preventing the calculation of the correct flow rate. The 3.6mA and 21mA alarm outputs are related to the NAMUR NE 43 alarm feature.

The options are:
- mA Fault=3.6 mA (Force the 4-20mA signal to 3.6mA on alarm)
- mA Fault=21 mA (Force the 4-20mA signal to 21mA on alarm)
- mA Fault=Not use (4-20mA signal alarm fault not used)

The following events will set the output to 3.6mA or 21mA if the alarm level is selected:
- Sensor resistance above high limit
- Sensor measurement circuit shutdown

Fig. 4.3: Range of 4-20mA Output and NAMUR Alarm

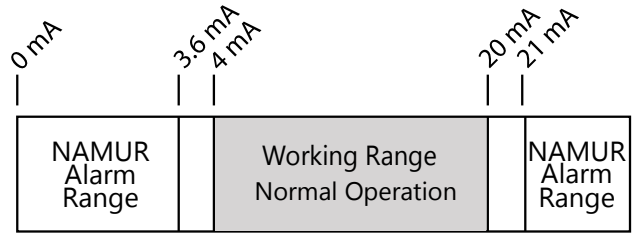

Press **(F4)** repeatedly until “Normal Mode” is seen briefly to exit the programming mode.

Pulse/alarm Output
The Pulse/alarm feature can be accessed from the Main Menu, press **I/O (F1).**

```
        SET        I/O
OUT     INP              EXIT
```

F1 F2 F3 F4

Press **OUT (F1)** to select the pulse output. The following screen will show:

```
OUT = Pulse
NXT                      OK
```

F1 F2 F3 F4

Press **NEXT (F1)** to cycle through output options until you have the selection for "OUT=Pulse" and press **OK (F4).**

The pulse output can be configured in one of three ways:

1. Specifying how many pulses per unit, P/U (i.e., 10 pulses per SCF)
2. Specifying how many flow units total per pulse, U/P (i.e., 0.1 SCF per pulse)
3. Specifying a maximum frequency to a defined maximum value of flow rate

All of these approaches are equivalent.

```
PULSE OUTPUT
P/U      U/P      FEQ     EXIT
```

F1 F2 F3 F4

Use **P/U (F1)** for pulses per unit. Use **U/P (F2)** for units per pulse. Use **FEQ (F3)** to for flow setpoint at maximum frequency.

NOTE! When data is entered with any of the three described methods, the other values will be re-calculated according to the settings.

Entering data in Pulse per Unit:
From the Pulse/alarm Output Menu above, press **P/U (F1)** and the following screen will show:

```
PLS/UNT = 2
CHG                      OK
```

F1 F2 F3 F4

Press **CHG (F1)** to change the setting and then **OK (F4)** to accept entry.

The value entered is in pulse per selected flow unit total (i.e., 2 pulses per SCF).

Entering data in Unit per Pulse:
From the Pulse/alarm Output Menu, press **U/P (F2)** and the following screen will show:

```
UNT/PLS = 0.5
CHG                OK
```

F1 F2 F3 F4

Press **CHG (F1)** to change the setting and then **OK (F4)** to accept entry.
The value entered is in unit per pulse (i.e. 0.5 flow unit total per pulse)

Entering data with flow and maximum frequency:
From the Pulse/alarm Output Menu, press **FEQ (F3)** and the following screen will show:

```
MaxFreq=100  Hz
CHG                OK
```

F1 F2 F3 F4

Enter the maximum pulse rate (frequency) and press **OK (F4).**

CAUTION! Maximum pulse rate (frequency) cannot exceed 100 Hz.

The next screen will show:

```
MaxFlo=5000 SCFM
CHG                OK
```

F1 F2 F3 F4

NOTE! If the flow rate exceeds the maximum pulse rate (frequency), the output will stay at 100 Hz and the FT1 will issue an alarm code.

Alarm Output
To access the Pulse/alarm feature, press **I/O (F1)** key from the Main Menu screen. The screen will show:

```
     SET       I/O
OUT    INP          EXIT
```

F1 F2 F3 F4

Then press **OUT (F1)** and the screen may show:

```
OUT = HiFloAlm
NXT                    OK
```

F1 F2 F3 F4

Then press **NXT (F1)** to select the correct alarm and press **OK (F4).**

Selections are:

- Not used
- Pulse
- HiFloAlm = High Flow Alarm
- LoFloAlm = Low Flow Alarm
- HiTempAlm = High Temperature Alarm
- LoTempAlm = Low Temperature Alarm
- System Alarm

When the output is set to Alarm and there is no alarm condition, the output will be on (0 volts). When an alarm is active, the output is turned off (12 to 24 volts).

```
HiFloAlm=500 SCFM
CHG                    OK
```

F1 F2 F3 F4

Enter the value for the limit by pressing **CHG (F1)** and then **OK (F4).** A value of 0 disables the alarm.

NOTE! There is only one output to operate as a pulse output or an alarm output. Both cannot operate at the same time.

Serial Communication Settings

If a communication feature was purchased, the Serial communication settings can be programmed by pressing **I/O (F1)** key from the Main Menu. The screen will show:

```
        I/O MENU
 I/O    COM   420    EXIT
```

F1 F2 F3 F4

Press **COM (F2)** to select Serial communication.
The screen may show:

```
Comm=Modbus
NXT                    OK
```

F1 F2 F3 F4

Options for serial communication are:
- None
- Modbus
- BACnet
- HART

NOTE! Any selection other than "None" requires the communication option for the selected communication type. If enabling a communication option, see the Communications Protocols section of this manual.

Display Setup

There are four display screens that you can cycle through in normal operating mode (see Figure 4.2 on p. 44). Two of the four display screens are fixed and cannot be changed (Display 3 and Display 4). The other two screens are programmable to show the information that you prefer and is discussed in this section.

Display #1

```
DSP1L1
DSP1L2
```

F1 F2 F3 F4

Display #2

```
DSP2L1
DSP2L2
```

F1 F2 F3 F4

Selections are:

DSP1L1 = Display 1, Line 1	DSP2L1 = Display 2, Line 1
DSP1L2 = Display 1, Line 2	DSP2L2 = Display 2, Line 2

To Program Display Screens #1 & 2:

From the Main Menu press **DSP (F3)** to select the display menu:

```
DISPLAY/PASSWORD
DSP          PSW     EXIT
```

F1 F2 F3 F4

Press **DSP (F1)** key. The display will show:

```
DSP1L1 = Flo rate
NXT                  OK
```

F1 F2 F3 F4

These are the selections for the Display 1, Line 1.

Selections are:
- Flo rate = Flow rate
- Total = Total mass or volume
- Elps = Elapsed time
- Temp = Temperature
- Alarm = Error codes

When the selection is correct, press **OK (F4)** to accept. The display will then go through the same process for all 4 lines of the 2 programmable displays (DSP1L1, DSP1L2, DSP2L1 and DSP2L2). After the last line of Display 2 is accepted, the display will show the following menu:

```
ALTERNATE = Off
NXT                    OK
```

F1 F2 F3 F4

This menu allows you to alternate between menu display 1 and 2 every few seconds.
Selections are: On or Off

Press **OK (F4)** to accept selection. Press **EXIT (F4)** repeatedly until "Normal Mode" is seen briefly to exit the programming mode.

Password
There are two user level passwords, only **Level 1** is programmable and gives access to all the normal settings. The second password is used to allow access to calibration settings.

Default **Level 1** password is "1234", and **Level 2** password is "9111". The **Level 1** programmable password can be disabled by setting it to "0".

From the Main Menu press **DSP (F3)** to select the display menu.

To Program the Password:

```
DISPLAY/PASSWORD
DSP            PSW    EXIT
```

F1 F2 F3 F4

Press **PSW (F3)** key to select password.

```
PASSWD = 1234
CHG                    OK
```

F1 F2 F3 F4

This screen displays the current **Level 1** password.
Press **CHG (F1)** key to change the password and enter new value.

Press **OK (F4)** to accept new data and exit programming by pressing **EXIT (F4)** key repeatedly until out of the programming mode.

NOTE! Password can be number or letter characters up to 4 digits.

Units Settings Menu
This menu is used to set the units for flow, temperature, and pressure as well as the setting of reference temperature and reference pressure.

These values will be set at Fox Thermal using information supplied by the customer. These values can be changed to match a new application. The units setting is accessed from the Main Menu. To access the Unit Settings Menu:

```
        MAIN MENU
I/O     FLO     DSP     EXIT
```

F1 F2 F3 F4

Press **FLO (F2)**:

```
        FLOW MENU 1
DGN     UNT     FM2     EXIT
```

F1 F2 F3 F4

Press **UNT (F2)** for Unit selection.

The screen will show:

```
FLO UNT = SCFM
NXT                     OK
```

F1 F2 F3 F4

Press **NXT (F1)** to change selection and **OK (F4)** to accept.

NOTE! The totalizer (total flow measured) will roll over when reaching a certain value. The maximum value is dependent on the flow units selected (see Totalizer Rollover p. 61).

Flow Units
Selections for flow units are:

SCFM	KG/M	LBS/D	SM3/H	MSCFD (MCFD)
SCFH	KG/S	NLPH	SM3/D	MMSCFD (MMCFD)
NM3/H	LBS/H	NLPM	NM3/D	MCFD (MSCFD)
NM3/M	LBS/M	NLPS	SLPM	MMSCFM (MMCFM)
KG/H	LBS/S	SM3/M	SCFD	MT/H

NOTE! Changing the flow units will automatically recalculate the 4-20mA range values, the Pulse Output maximum flow, and the flow cutoff. The Pipe ID will change between inches and millimeters to match Imperial vs Metric flow rates.

Temperature Units
After pressing **OK (F4)** to accept the Flow unit the display will prompt for the temperature unit setting:

```
TMP UNT= ° F
NXT                    OK
```

F1 F2 F3 F4

Press **NXT (F1)** to change selection and **OK (F4)** to accept.

Selections for Temperature units are: °C or °F

Reference Temperature
After pressing **OK (F4)** to accept the temperature unit setting, the display will prompt for temperature reference in selected unit.

```
TmpRef = 60 °F
CHG                    OK
```

F1 F2 F3 F4

Press **CHG (F1)** to change the reference and **OK (F4)** to accept.

Pressure Units
After pressing **OK (F4)** to accept the reference temperature, the display will prompt for the reference pressure unit selection:

```
PRES UNT= Psia
NXT                    OK
```

F1 F2 F3 F4

Press **NXT (F1)** to select next entry and **OK (F4)** to accept.
Selections are:
mmHG = Millimeters of mercury (absolute)
Psia = Pounds per square inch absolute
bara = Bar absolute

Reference Pressure
After the pressure unit selection is made, the display will show a menu to enter the reference pressure:

```
PresRef= 14.7
CHG                    OK
```

F1 F2 F3 F4

Press **CHG (F1)** to change it and **OK (F4)** to accept.

Accessing Flow Parameters and Alarm Settings
This is the menu used to set various flow parameter values. They are: Flow cutoff, pipe diameter, filter, high and low alarm for flow and temperature.

NOTE! The parameters in this menu are set to the customer specifications at the factory. They should only be changed when changing the application of the flow meter.

```
        MAIN MENU
I/O     FLO     DSP     EXIT
```

F1 F2 F3 F4

The menu is accessed from the Main Menu by pressing **FLO (F2)**:

```
        FLOW MENU 1
DGN     UNT     FM2     EXIT
```

F1 F2 F3 F4

Then press **FM2 (F3)**:

```
        FLOW MENU 2
GAS     SPC     PRM     EXIT
```

F1 F2 F3 F4

NOTE! The **SPC (F2)** - or special - function key will only appear and be accessible from a **Level 2** password.

Then press **PRM (F3)**. This will move into settings for flow cutoff, pipe diameter, and filter value. These settings will be followed by the high and low alarm settings for flow rate and/or temperature.

Programming Flow Parameters
Flow Cutoff
The first parameter is Flow Cutoff:

```
CUTOFF = 2.0  SCFM
CHG                     OK
```

F1 F2 F3 F4

Enter the value for the flow cutoff and then press **OK (F4)**. When the flow rate falls below the flow cutoff, the flow meter will display a flow value of zero.

Pipe Diameter
To set the pipe diameter, enter the pipe diameter in **inches** or **millimeters** and then press **OK (F4)**.

```
Pipe_id  = 3.068  In
CHG                 OK
```

F1 F2 F3 F4

Use millimeters for metric flow unit selections and inches for English flow unit selections. This selection is dependent on the flow unit selected (English vs metric). If the pipe/duct is a square or rectangle, the hydraulic diameter (equivalent value for a round pipe) must be entered for the pipe ID.

Filter Value
The filter value is entered in seconds. The allowable time constant range is 0.8 to 10 seconds. The filter time interval is proportional to the dampening.

Enter the filter value and then press **OK (F4)**.

```
FILTER = 0.8 sec
CHG                 OK
```

F1 F2 F3 F4

Programming High and Low Alarm Settings
Settings for the alarms directly follow the flow parameters for flow cutoff, pipe diameter, and filter value. These alarms can be used without the digital output assigned to the alarm. If that is the case, the alarm status will only be shown on the display, through serial communication, or FT1 View™. If the digital output is assigned to an alarm, changing the value here will change that setting.

High Flow Rate Alarm
This is the upper flow limit alarm value that can be associated with the alarm output. An alarm code is generated when the flow value exceeds this limit. If no alarm is needed, set this value to zero.

To set the parameters for a high flow rate alarm, press **CHG (F1)**:

```
HiFloAlm = 1234  SCFM
CHG                 OK
```

F1 F2 F3 F4

Press **OK (F4)** to accept the value.

Low Flow Rate Alarm
This is the lower flow limit alarm value that can be associated with the alarm output. An alarm code is generated when the flow value is below this limit. If no alarm is needed, set this value to zero.

To set the parameters for a low flow rate alarm, press **CHG (F1)**:

```
LoFloAlm = 100 SCFM
CHG                OK
```

F1 F2 F3 F4

Press **OK (F4)** to accept the value.

High Temperature Alarm
This is the upper temperature limit alarm value that can be associated with the alarm output. An alarm code is generated when the temperature value exceeds this limit. If no alarm is needed, set this value to zero.

To set the parameters for a high temperature alarm, press **CHG (F1)**:

```
HiTmpAlm = 200 F
CHG                OK
```

F1 F2 F3 F4

Press **OK (F4)** to accept the value.

Low Temperature Alarm
This is the lower temperature limit alarm value that can be associated with the alarm output. An alarm code is generated when the temperature value is below this limit. If no alarm is needed, set this value to zero.

To set the parameters for a high temperature alarm, press **CHG (F1)**:

```
LoTmpAlm = 20 F
CHG                OK
```

F1 F2 F3 F4

Press **OK (F4)** to accept the value.

Simulation
This menu allows for simulation of flow rate and temperature. It should only be used for testing and demonstration purposes. **Make sure to return all of these simulation values to zero, before returning to the normal mode of operation.**

CAUTION! FT1 outputs (pulse/alarm) - when in simulation mode - may affect the user's system. The user should ensure that this simulation state of operation cannot cause a hazardous or destructive event.

The menu is accessible from the Main Menu by pressing **FLO**:

```
        FLOW MENU 1
DGN     UNT     FM2     EXIT
```

F1 F2 F3 F4

Pressing **DGN (F1)** will show:

```
    DIAGNOSTIC
SIM     CAL-V           EXIT
```

F1 F2 F3 F4

Pressing **SIM (F1)** will show:

```
Simulate Flow?
YES                     NO
```

F1 F2 F3 F4

Press **YES (F1)** to continue.

```
FloSim = 0 SCFM
CHG                     OK
```

F1 F2 F3 F4

Enter the value and then press **OK (F4)**.

NOTE! Enter zero to disable this feature.

```
Simulate Temp?
YES                     NO
```

F1 F2 F3 F4

Press **YES (F1)** to continue.

```
TmpSim = 0 C
CHG                     OK
```

F1 F2 F3 F4

Enter the value and then press **OK (F4)**. Enter zero to disable this feature.

```
ENABLE SIM?
YES                    NO
```

F1 F2 F3 F4

Press **YES** (**F1**) to start the simulation mode, otherwise press **NO** (**F4**). Upon pressing either key, the program will return to the FLOW MENU 1 screen.

NOTE! Simulation Mode will be exited if the power is cycled.

K Factor

The K Factor allows the user to adjust the meter's calibration. The Fox Thermal flow meter increases the calculated flow rate by the K Factor. This results in a direct scaling of the meter's output across the entire full range.

The K Factor parameter is accessed from the "Flow Menu 2" menu by entering a **Level 2** password "9111" and pressing the **SPC** key (**F2**).

```
        FLOW MENU 2
GAS    SPC    PRM    EXIT
```

F1 F2 F3 F4

The following screen will be displayed:

```
K fact=0%
CHG                    OK
```

F1 F2 F3 F4

Press **CHG (F1)**. Add the correction factor and press **OK (F4)**.

If you want the flow meter to read 5% higher, enter 5.0%.
If you want the flow meter to read 5% lower, enter -5.0%.
If an existing K Factor is present, add the additional K Factor to the existing value.

Upon pressing **OK (F4)**, an option to restore the database will follow.

Restore Database

In case of user error, the ability to restore the meter to the original factory settings can be achieved in this menu. The display will show:

```
RESTORE DATABASE?
YES                    NO
```

F1 F2 F3 F4

Press **YES (F1)** ONLY if you want to restore your database to the initial factory setting that the meter was shipped with. All current user-entered settings will be overwritten. The green LP3 LED will flash at a faster pace until the restore is completed.
Upon pressing **OK (F4)**, an option to reset CRC will follow.

Reset CRC
If the NVRAM CRC check fails (Error Code 36), the programmed settings values will need to be verified and corrected before clearing the error. Call Fox Thermal Customer Service if you need assistance.

```
RESET CRC?
YES                    NO
```

F1 F2 F3 F4

Press **YES (F1) ONLY** if you want to reset the CRC and generate a new CRC value.

Set Non-Resettable Totalizer (NRT)
The Non-Resettable Totalizer (NRT) feature is only used in applications where clearing (resetting) the flow total measurement is not allowed. Selecting NRT=YES and confirming the selection will set the NRT feature and prevent clearing the flow total.

```
SET NRT?Off
YES                    NO
```

F1 F2 F3 F4

WARNING! Once the Non-Resettable Totalizer feature is activated, it cannot be undone.

Enable FC20 Flow Conditioner
The flow conditioner parameter should be enabled when the FT1 is used with a FC20 style flow conditioner. The parameter will be automatically set by the factory when ordering the flow meter with the flow conditioner. When the flow conditioner is added separately in the field, the flow conditioner parameter must be turned on to compensate for the measurement effect.

```
FC20=Off
NXT                    OK
```

F1 F2 F3 F4

Reset Total and Elapsed Time

Enter the flow totalizer and elapsed time screen by pressing the **F3** and **F4** keys at the same time in the normal running mode.

```
RESET TOTAL ?
NO                YES
```

F1 F2 F3 F4

Press **YES (F4)** and enter password to reset total and elapsed time. Press **NO (F1)** to cancel.

NOTE! This feature is not available on non-resettable units.

Totalizer Rollover: The FT1 has an automatic roll-over function. The total flow count of the FT1 will roll over after 99,999,999,999. Except for:

MSCFD:	999,999,999
MMSCFM:	9,999,999
MMSCFD:	999,999

Calibration of the Fox Thermal FT1 Thermal Flow Meter
To ensure that all Fox Thermal flow meters meet specified performance parameters and provide accurate, repeatable measurements in the field, all calibrations are performed with NIST-traceable flow standards. Each meter is shipped from the factory with a Fox Thermal Calibration Certificate.

Calibration Validation
Calibration Validation allows customers to validate the accuracy and functionality of the meter in the field with a push of a button. By performing a simple test, the operator can verify that the meter is running accurately.

CAL-V Calibration Validation Test
Fox Thermal has developed the CAL-V™ Calibration Validation test to help our customers avoid sending the meter back for annual or biennial recalibration.

CAL-V™ ensures the repeatability, functionality of the sensor and its associated signal processing circuitry, and cleanliness of the sensor.

During the CAL-V™ calibration validation test, the microprocessor adjusts current to the sensor elements and determines the resulting electrical characteristics. Data within established tolerances confirms the meter is accurate.

Recommended Conditions for Performing CAL-V™ Test
Fox Thermal recommends the CAL-V™ test be run under flowing conditions, especially in smaller pipe sizes. If the CAL-V™ test does not produce a "PASS" result, refer to "CAL-V™ Test Results" on page 64.

NOTE! If the CAL-V™ test is performed using the Fox Thermal ModbusView™ or FT1 View™ Software, at the completion of the test, a CAL-V™ Certificate may be printed for a record of the test. This certificate will display a pass/fail result.

Performing the CAL-V™ Calibration Validation Test
Press **FLO (F2)** from the Main Menu. The display will show:

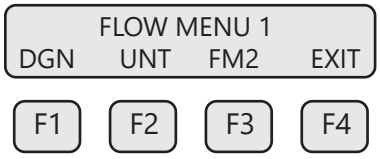

Press **DGN (F1).** The display will show:

```
DIAGNOSTIC MENU
SIM    CAL-V          EXIT
```

F1 F2 F3 F4

Press **CAL-V (F2)**. The display will show:

```
CAL-V MENU
VER                   EXIT
```

F1 F2 F3 F4

Press **VER (F1)** to perform the CAL-V™ verification test.

```
VERIFY CAL-V?
YES                   NO
```

F1 F2 F3 F4

Press **YES (F1)** to continue.

```
Flo:Hold value
NXT          EXIT     OK
```

F1 F2 F3 F4

Press **NXT (F1)** key to toggle between Hold value and Go to zero, see the screen below.
During the CAL-V test, Hold value will keep the flow 4-20mA and Pulse outputs at the last value measured.
During the CAL-V test, Go to zero will set the flow 4-20mA and Pulse outputs to the equivalent of zero flow.

```
Flo:Go to zero
NXT          EXIT     OK
```

F1 F2 F3 F4

Press **OK (F4)** to continue with the CAL-V test.

WARNING! If you are using closed loop control, the system needs to be taken off-line during the test.

```
Take Control
off-line     EXIT     OK
```

F1 F2 F3 F4

This screen verifies that the user is ready to begin the CAL-V test and that the 4-20mA and Pulse outputs will not be operating normally. Press **OK (F4)** to start CAL-V™. CAL-V™ test screen:

```
Verifying CAL-V
y.yyy                T=xx
```

F1 F2 F3 F4

This test takes 5 minutes (300 seconds). During the test, the display will show the CAL-V™ value changing as the power to the sensor is adjusted. "T=xx" is a CAL-V™ timer indicating how much time is left to finish the test.

CAL-V™ Test Results
Upon test completion, the final CAL-V™ value will be displayed along with a Pass, Fail, or Warning message:

- Pass: less than ±0.80
- Warning: between ±0.80 to ±1.0
- Fail: greater than ±1.0

Recommended next steps if a "Warning" or "Fail" result is displayed:

- Run the test again under a higher flow rate if possible.
- Remove the probe from the pipe, clean the sensor, and perform the test again under a normal or high flow rate.

If a "Warning or "Fail" result is displayed after repeating the test, please call Fox Thermal Service at (831) 384-4300 for assistance.

```
CAL-V = 0.251
Pass                 OK
```

F1 F2 F3 F4

Press **OK (F4)** to exit the menu when the test is complete.

Gas-SelectX® Available Gases and Gas Mixes
This menu allows the user to select a gas or gas mix from a list of gases/gas mixtures available on the Fox Thermal FT1 flow meter.

The molar percentages of the gases in any mix are programmable in 0.000001% increments. Any five gases may be mixed in any proportion equal to 100%. "Natural gas" in the menu is defined as the NAESB Natural Gas mix (94.9% Methane, 0.7% CO_2, 1.6% N_2, 0.3% Propane, and 2.5% Ethane).

Gases and gas mixes available in the Gas-SelectX® feature include:

Pure Gas Menu	5-Gas Mix Menu	
Air	Methane	Ammonia*
Argon	Carbon Dioxide	Chlorine *
Butane	Nitrogen	Carbon Monoxide *
Carbon Dioxide	Helium	N2O *
Methane	Argon	Water*
Natural Gas (NAESB)	Hydrogen	Acetone*
Nitrogen	Air	
Oxygen	Propane	
Helium	Butane	
Hydrogen	Oxygen	
Propane	Ethane	
Ethane		
%Mix		

**These gases are only available on FT1 firmware v10.0 or later.*

NOTE! For the latest gas and gas mix menu, visit the Fox Thermal Website: www.foxthermal.com

Accessing the Gas-SelectX® Gas Selection Menu Feature

Enter the programming mode on the meter (refer to p. 45) and then follow these instructions to access the Gas-SelectX® feature:

MAIN MENU
I/O FLO DSP EXIT
F1 F2 F3 F4

Press **FLO (F2)** from the Main Menu to enter Flow Menu 1.

FLOW MENU 1
DGN UNT FM2 EXIT
F1 F2 F3 F4

Press **FM2 (F3)** to get to Flow Menu 2.

FLOW MENU 2
GAS SPC PRM EXIT
F1 F2 F3 F4

Press **GAS (F1)** to access the Gas-SelectX® feature. The display may show:

```
      GAS=Methane
NXT                    OK
```

F1 F2 F3 F4

From this screen, the user will be able to access two aspects of the Gas-SelectX® Menu:
1. Pure Gas = Choosing from a list of available gases, or
2. Gas Mix = Programming a specific mixture of up to five gases

Choosing a Gas from the Gas-SelectX® Menu
The Gas-SelectX® Menu will show one of the available gases/gas mixtures:

```
GAS=Air
NXT                    EXIT
```

F1 F2 F3 F4

Press **NXT (F1)** to choose from a list of gases. Gas choices are listed on the previous page.
To choose any pure gas, cycle through until the correct gas is displayed and press **OK (F4)** to choose the gas.
To create a gas mix, choose %Mix from the list and press **OK (F4)**.

```
GAS= %Mix
NXT                    OK
```

F1 F2 F3 F4

The screen will show:

```
Methane=0%
CHG                    OK
```

F1 F2 F3 F4

This screen shows the percentage of the gas mixture allocated to methane. In this case, it shows 0%.
To program the specific mixture of methane, press **CHG (F1)**.

```
Methane=30%
 UP      DN            OK
```

F1 F2 F3 F4

To set the percentage of methane in the gas mix, press **UP (F1)** or **DN (F2)**.

Once the desired methane percentage is displayed, press **OK (F4)**. The display will move to the

view of the concentration of each of the subsequent list of gases: Methane, Carbon Dioxide (CO_2), Nitrogen, Helium, Argon, Hydrogen, Air, Propane, Butane, Oxygen, and Ethane (in that order). Natural Gas is not allowed to be part of the mix, as it is a mix itself.

```
CO2=0%
CHG                    OK
```

F1 F2 F3 F4

Once the desired gas percentages are programmed, press **OK (F4)**.
One of the following messages will appear:

```
Gas Mix (100%)
                       OK
```

F1 F2 F3 F4

Shows only if no error is detected. Pressing OK allows exit to menu.

```
Err: Mix=(110%)
                       OK
```

F1 F2 F3 F4

Shows only if gas mix does not equal 100%. Pressing OK returns to gas entry.

```
Err: Max 5 gas
                       OK
```

F1 F2 F3 F4

Shows only if too many gases are selected. Only five gases are allowed. Pressing OK returns to gas entry.

NOTE! The gas selection must be valid or the gas mix must have a valid 100% mixture before the user is allowed to exit.

Once the "Gas Mix (100%)" message appears, you have successfully programmed the gas mix in Gas-SelectX® and can exit. Press **OK (F4)** to set the mixture.

The FT1 will begin to monitor flow based on the algorithm for the gas selected in the Gas-SelectX® feature. The screen will show the flow in units and the total flow similar to the example below:

```
1162.52 SCFM
6205012.50 SCF
```

F1 F2 F3 F4

From normal operating mode, the gas selection can be seen on display 3 (see p. 44).

Modbus Communication Scope
This portion of the manual describes the Modbus implementation using RS485 serial communication physical layer for the Fox Thermal FT1 mass flow meter based on the Modicon Modbus Protocol (PI-MBUS-300).

Modbus Protocol
Modbus Protocol is an application layer messaging protocol that provides client/sever communications between devices. Modbus is a request/reply protocol and offers services specified by function codes.

The size of the Modbus Protocol Data Unit is limited by the size constraint inherited from the first Modbus implementation on Serial Line network (max. RS485 Application Data Unit = 256 bytes). Therefore, Modbus PDU for serial line communication = 256 – Server address (1 byte) – CRC (2 bytes) = 253 bytes.

RS485 ADU = 253 + Server address (1 byte) + CRC (2 bytes) = 256 bytes.

For more information on Modbus go to the web site http://www.modbus.org/.

Command Request:
<Meter Address> <Function code> <Register start address high> <Register start address low> <Register count high> <Register count low> <CRC high> <CRC low>

Command Response:
<Meter Address> <Function code> <Data byte count> <Data register high> <Data register low> ... <Data register high> <Data register low> <CRC high> <CRC low>

NOTE! The data shown in brackets < > represents one byte of data.

Modbus Indicators
Green LED indicator LP3 cycles on and off to indicate that the FT1 is operating. Orange LED indicator LP2 blinks when Modbus signals are received and yellow LP1 blinks when Modbus signals are transmitted. The LEDs are located behind the display panel.

Communication Protocol and Parameters
To program the communication parameters, start at the Main Menu:

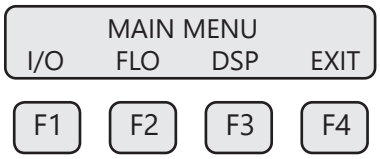

Then press **I/O (F1)** to set Inputs/Outputs:

```
        SET I/O
COM            420     EXIT
```

F1 F2 F3 F4

Then press **COM (F1)** to select communication parameters.

Set Bus protocol for Modbus:

```
Comm=Modbus
NXT                    OK
```

F1 F2 F3 F4

Press **NXT (F1)** repeatedly until Modbus is selected as shown and then press **OK (F4)** to accept the setting. The following communication settings apply only to Modbus:

```
Baud=9600
NXT                    OK
```

F1 F2 F3 F4

Press **NXT (F1)** repeatedly until the correct selection is shown then press **OK (F4)** to accept the setting.

Selections are:	115200	9600
	76800	4800
	57600	2400
	38400	1200
	19200	

```
Parity=EVEN
NXT                    OK
```

F1 F2 F3 F4

Press **NXT (F1)** repeatedly until the correct selection is shown and then press **OK (F4)** to accept the setting.

Selections are:	NONE
	ODD
	EVEN

```
Address=02
CHG                    OK
```

F1 F2 F3 F4

Press **CHG (F1)** to change the address and then press **OK (F4)** to accept the setting. Selections are between 01 and 247.

NOTE! Power cycle is required for the new settings to take effect.

Modbus Function Codes Supported by the FT1
The FT1 supports the following commands:
1) Command 03: Read multiple registers
2) Command 04: Read single register.
3) Command 06: Write single register
4) Command 16: Write multiple registers (limited to gas percentage register pairs)

Read Multiple Registers (command 03)
This command reads one or more 16-bit registers from the FT1 and has the following format:

Request:
<Meter Address> <Command code=03> <Register start address high> <Register start address low> <Register count high> <Register count low> <CRC high> <CRC low>

Response:
<Meter Address> <Command code=03> <Byte count> <Data high><Data low> ... <Data high><Data low> <CRC high> <CRC low>

Example: Request data register at starting address 0x0000 and specifying 2 registers

<0x01> <0x03> <0x00> <0x00> <0x00> <0x02> <0xC4> <0x0B>

Response:
<0x01> <0x03> <0x04> <xx> <xx> <xx> <xx> <CRC high> <CRC low>

Where xx xx is the data register value.

Read Single Register (Command 04)
This command is used to report the status information.

Request:
<Meter Address> <Command code=04> <Register address =0> <Register address =0> <Register count =0> <Register count =1> <CRC high> <CRC low>

Response:
<Meter Address> <Command code=04> <Byte count =2> <Status High><Status Low> <CRC high> <CRC low>

Write Single Register (Command 06)
This command is used to perform miscellaneous functions such as clearing the totalizer and elapsed time. The register address is Modbus=40018 and the data to write is described in table 5.1.

Request:
<Meter Address> <Command code=06> <Register address high=0x00> <Register address low=0x11> <Register data high=0x00> <Register data low =0x02> <CRC high> <CRC low>

Response:
<Meter Address> <Command code=06> <Register address =0x00> <Register address =0x11> <Register data=0x00> <Register data =0x02> <CRC high> <CRC low>

Write Multiple Registers (Command 16)
This command is restricted to writing to the gas mix percentage settings in registers 40058 – 40081. The preset single register command is not allowed to write to these registers. The percentage settings are 32-bit floating point numbers in units of percent. A setting of 12.7 means 12.7%.

Request message:
<Meter Address> <Command code=16 (0x10)> <Starting register address MSB> <Starting register address LSB> <Number of registers MSB> <Number of registers LSB> <Byte count> <Register data MSB> <Register data LSB> … <Register data MSB> <Register data LSB> <CRC LSB> <CRC MSB>

Response message:
<Meter Address> <Command code=16 (0x10)> <Starting register address MSB> <Starting register address LSB> <Number of registers high> <Number of registers low> <CRC LSB> <CRC MSB>

NOTE! Response message issue with firmware older than v5.5: the starting register in the response message is incorrect.

Floating point data layout
Each 32-bit floating point value uses two consecutive Modbus registers. The most significant byte of the lower numbered register holds the least significant byte of the significand. The least significant byte of the lower numbered register holds the next most significant byte of the significand. The most significant byte of the higher numbered register holds the sign bit and most significant 7 bits of the exponent. The least significant byte of the higher numbered register holds the least significant bit of the exponent and the most significant 7 bits of the significand.

In the following tables:
S0 – S23 are the significand bits from least to most significant.
E0 – E7 are the exponent bits from least to most significant.
Sign is 1 if the number is negative, and 0 if the number if positive.

Lower numbered register															
15	14	13	12	11	10	9	8	7	6	5	4	3	2	1	0
S15	S14	S13	S12	S11	S10	S9	S8	S7	S6	S5	S4	S3	S2	S1	S0

Higher numbered register															
15	14	13	12	11	10	9	8	7	6	5	4	3	2	1	0
Sign	E7	E6	E5	E4	E3	E2	E1	E0	S22	S21	S20	S19	S18	S17	S16

Since the Modbus register data is sent most significant byte first and the registers are sent lowest numbered first, a floating point value will look like this in the data stream:

First byte (MSB of lower register)								
Data bit	7	6	5	4	3	2	1	0
Value bit	S15	S14	S13	S12	S11	S10	S9	S8

Second byte (LSB of lower register)								
Data bit	7	6	5	4	3	2	1	0
Value bit	S7	S6	S5	S4	S3	S2	S1	S0

Third byte (MSB of higher register)								
Data bit	7	6	5	4	3	2	1	0
Value bit	Sign	E7	E6	E5	E4	E3	E2	E1

Fourth byte (LSB of higher register)								
Data bit	7	6	5	4	3	2	1	0
Value bit	E0	S22	S21	S20	S19	S18	S17	S16

Example: Set the gas mix as 60% methane and 40% butane.

This requires setting the registers 40058 through 40075. Register pair 40058-40059 will be set to 60.0 percent, register pair 40074-40075 will be set to 40.0 percent, and the rest of the register pairs will be set to 0.0 percent.

The message byte stream will be (bytes on the same line are sent leftmost first):

<0x01>	Address = 1
<0x10>	Function = write multiple registers
<0x00> <0x39>	Start index = 57, meaning register 40058
<0x00> <0x22	Register count = 34 (holding 17 32-bit floating point values)
<0x44>	Number of data bytes = 68
<0x00> <0x00> <0x42> <0x70>	Value = 60.0%
<0x00> <0x00> <0x00> <0x00>	Value = 0.0%

<0x00>	<0x00>	<0x00>	<0x00>	Value = 0.0%
<0x00>	<0x00>	<0x00>	<0x00>	Value = 0.0%
<0x00>	<0x00>	<0x00>	<0x00>	Value = 0.0%
<0x00>	<0x00>	<0x00>	<0x00>	Value = 0.0%
<0x00>	<0x00>	<0x00>	<0x00>	Value = 0.0%
<0x00>	<0x00>	<0x00>	<0x00>	Value = 0.0%
<0x00>	<0x00>	<0x00>	<0x00>	Value = 40.0%
<0x00>	<0x00>	<0x00>	<0x00>	Value = 0.0%
<0x00>	<0x00>	<0x00>	<0x00>	Value = 0.0%
<0x00>	<0x00>	<0x00>	<0x00>	Value = 0.0%
<0x00>	<0x00>	<0x00>	<0x00>	Value = 0.0%
<0x00>	<0x00>	<0x00>	<0x00>	Value = 0.0%
<0x00>	<0x00>	<0x00>	<0x00>	Value = 0.0%
<0x00>	<0x00>	<0x00>	<0x00>	Value = 0.0%
<0x00>	<0x00>	<0x42>	<0x20>	Value = 0.0%
<0x61>	<0xCB>			CRC

Response message:

<0x01>	Address = 1
<0x10>	Function = write multiple registers
<0x00> <0x39>	Start index = 57, meaning register 40058
<0x00> <0x22>	Register Count = 34 (holding 17 32-bit floating point values)
<0x90> <0x1D>	CRC

Table 5.1: FT1 Modbus Registers

Modbus Register	Data Type	Description	Units
40001	32-bit int LSW	Flow	User selected
40002	32-bit int MSW		
40003	32-bit int LSW	Flow Total	User selected
40004	32-bit int MSW		
40005	32-bit int LSW	Temperature	Tenths of user selected
40006	32-bit int MSW		
40007	32-bit int LSW	Elapsed time	Tenths of user selected
40008	32-bit int MSW		
40009**	16-bit int	Firmware version x10 (scaled up for 16-bit format)	
40010		Reserved	
40011	16-bit int	Flow x 10 (flow scaled for 16-bits)	Tenths of user selected
40012	16-bit int	Flow x 100 (flow scaled for 16-bits)	Hundredths of user selected
40013	16-bit int	Total x 100 (flow total scaled for 16-bits)	Hundredths of user selected
40014**	32-bit float LSW	Gross Heating Value (GHV)	BTU/Ft3
40015**	32-bit float MSW	Gross Heating Value (GHV)	BTU/Ft3
40016	16-bit int	Status	
40017	16-bit int	Status 2	
40018	16-bit int	Control Register (write only), (Reset Total = 2, Perform CAL-V = 173, Abort CAL-V = 174)	
40019**	16-bit int	Model Status (Read only) FT1 = 0x01	
40020	32-bit float LSW	Flow	User selected
40021	32-bit float MSW		
40022	32-bit float LSW	Total	User selected
40023	32-bit float MSW		
40024**	32-bit float LSW	Reference Pressure (MMHG = 0, PSIA = 1, BARA = 2)	User selected
40025**	32-bit float MSW		
40026	32-bit float LSW	Temperature	User selected
40027	32-bit float MSW		
40028	32-bit float LSW	Elapsed time	Hours
40029	32-bit float MSW		
40030	32-bit float LSW	Calibration validation result	
40031	32-bit float MSW		
40032 to 40037		Reserved	
40038**	16-bit int	Flow Unit Code (SCFM = 0, SCFH = 1, NM3_H = 2, NM3_M = 3, KG_H = 4, KG_M = 5, KG_S = 6, LBS_H = 7, LBS_M = 8, LBS_S = 9, NLPH = 10, NLPM = 11, MMSCFD = 15, LBS_D = 16, SLPM = 17, NLPS = 18, MSCFD = 19, SM3_H = 20, MT_H = 21, NM3_D = 22, MMSCFM = 23, SCFD = 24, MCFD = 25, SM3M = 26, SM3D = 27)	User selected
40039**	16-bit int	Temp Unit Code (Degree F = 0, Degree C = 1)	User selected
40040**	16-bit int	Pressure Unit Code (MMHG = 0, PSIA = 1, BARA = 2)	User selected
40041 to 40055		Reserved	

Table 5.1: FT1 Modbus Registers (cont'd)

Modbus Register	Data Type	Description	Units
40056 to 40196		Gas-SelectX Registers	
40197**	32-bit float LSW	Gas Density STP	KG/M3
40198**	32-bit float MSW		
40199**	32-bit int LSW	Serial Number Int	
40200**	32-bit int MSW		
40201**	16-bit int	ADC Status	
40202**	32-bit float LSW	ADC Temp	Degrees Celsius
40203**	32-bit float MSW		
40204**	16-bit int	Previous CAL-V Year*	Year
40205**	16-bit int	Previous CAL-V Month*	Month
40206**	16-bit int	Previous CAL-V Day*	Day
40207**	16-bit int	Previous CAL-V Hour*	Hour
40208**	16-bit int	Previous CAL-V Minute*	Minute
40209**	16-bit int	Previous CAL-V Second*	Second
40210**	32-bit float LSW	Previous CAL-V Value	
40211**	32-bit float MSW		
40212***	32-bit float LSW	Flow Cutoff	User Selected
40213***	32-bit float MSW		
40214***	32-bit float LSW	Output Filter	
40215***	32-bit float MSW		
40216***	32-bit float LSW	Pipe ID	Matches Flow Unit Selection (in or mm)
40217***	32-bit float MSW		
40218***	32-bit float LSW	Hi Flo Limit	User Selected
40219***	32-bit float MSW		
40220***	32-bit float LSW	Lo Flo Limit	User Selected
40221***	32-bit float MSW		
40222***	32-bit float LSW	Hi Temp Limit	User Selected
40223***	32-bit float MSW		
40224***	32-bit float LSW	Lo Temp Limit	User Selected
40225***	32-bit float MSW		
40226***	16-bit int	CH1 4-20mA Data Select [0=Flow, 1=Temp]	
40227***	32-bit float LSW	CH1 20mA Value	User Selected Flow or Temp Units
40228***	32-bit float MSW		
40229***	32-bit float LSW	CH1 4mA Value	User Selected Flow or Temp Units
40230***	32-bit float MSW		
40231***	16-bit int	CH1 NAMUR Setting [0=Not Used, 1=3.6mA, 2=21mA]	
40232 to 40237		Reserved	
40238***	32-bit float LSW	K Factor	
40239***	32-bit float MSW		

Table 5.1: FT1 Modbus Registers (cont'd)

Modbus Register	Data Type	Description	Units
40240***	32-bit float LSW	Ref Temp	User Selected
40241***	32-bit float MSW		
40242***	32-bit float LSW	Flow Simulation Value	User Selected
40243***	32-bit float MSW		
40244***	32-bit float LSW	Temperature Simulation Value	User Selected
40245***	32-bit float MSW		
40246***	16-bit int	Simulation Status	Status Bytes
40247***	16-bit int	CAL-V Hold Flow [0=Go to Zero, 1=Hold Flow]	
40248***	16-bit int	Display 1 Line 1 [0=flow, 1= total, 2=elp time, 3=temp, 4= alarm]	
40249***	16-bit int	Display 1 Line 2 [0=flow, 1= total, 2=elp time, 3=temp, 4= alarm]	
40250***	16-bit int	Display 2 Line 1 [0=flow, 1= total, 2=elp time, 3=temp, 4= alarm]	
40251***	16-bit int	Display 2 Line 2 [0=flow, 1= total, 2=elp time, 3=temp, 4= alarm]	
40252***	16-bit int	Alternate Display [0=no alternating, 1=alternate]	

*Last CAL-V Data and Time is only valid when using FT1 View Software.

**Registers available on FT1 firmware v8.3 or later.

***Registers available on FT1 firmware v10.0 or later.

NOTES!

- In Least Significant Word (LSW) and Most Significant Word (MSW), “word” is one 16-bit Modbus register. A 32-bit float or 32-bit integer is stored in a pair of Modbus registers. When a register is designated as “32-bit int LSW”, it means bits 0-15 of the variable are in that register. A register designated as MSW has bits 16-31 of the variable. For instance, the flow total can be read as a 32-bit integer from registers 40003 (LSW) and 40004 (MSW). If the flow total is 0x12345678, then register 40003 will hold 0x5678, and register 40004 will hold 0x1234. See the layout of a 32-bit floating point value on p. 71.
- 32-bit floating point values are defined by the IEEE 754 standard: https://ieeexplore.ieee.org/document/8766229
- Refer to Wikipedia: https://en.wikipedia.org/wiki/Single-precision_floating-point_format

Table 5.2: Status Bits Definitions for Command 04, Modbus Address 40016

Bit	Definition	Comment
0	Power up indication	Cleared when out of the power up sequence
1	Flow rate reached high limit threshold	Set limit to zero to disable
2	Flow rate reached low limit threshold	Set limit to zero to disable
3	Temperature reached high limit threshold	Set limit to zero to disable
4	Temperature reached low limit threshold	Set limit to zero to disable
5	Sensor reading is out of range	Check sensor wiring
6	Gas mix error	Gas mix must total 100%
7	Incorrect Settings	Check settings and parameters in meter
8	In simulation mode	Set simulation value to 0 to disable
9	Pulse/alarm output is out of range	Check pulse/alarm output settings
10	Analog 4-20mA is out of range	Check analog output settings
11	Not used	Not used
12	Not used	Not used
13	Not used	Not used
14	CRC error	Check parameters and reset CRC
15	Error in Total	Reset total to clear alarm

Table 5.3: Status 2 Bits Definitions for Command 04, Modbus Address 40017

Bit	Definition
0	Pulse hardware
1	Busy
2	HART hardware
3	Not Used
4	CAL-V in process
5	CAL-V fail
6	CAL-V aborted
7	CAL-V warning

Using Modbus to Program Gas-SelectX®

Modbus can be used to access and program gases/gas mixes in the Gas-SelectX® feature available on the FT1.

Selecting FT1 Gases and Gas Mixes

Modbus register 40056 selects the gas type, which may be a pure gas (plus NAESB natural gas composition) or custom gas mix. Register 40057 will read zero, and register 40056 will read the gas selection that was chosen. Writing to register 40057 will produce an error response. See the Gas Selection Codes (Table 5.4) for the values to write.

Table 5.4: Gas Selection Codes

Selection Code	Gas
0	Methane
1	CO2 (Carbon Dioxide)
2	Nitrogen
3	Air
4	Natural Gas
5	Argon
6	Propane
7	Helium
8	Oxygen
10	Butane
11	Hydrogen
13	Ethane
250	Gas Mix (must set percentages)

Setting Mix Percentages

To set a custom gas mix, first set the Selection Code to 250 (Mixed Gas). Next, go through each gas mix register and set the percentages to the desired 32-bit floating point values (see table 5.5 below, where these values are split in two 16-bit registers). Ensure that you don't exceed the maximum number of gas components allowed for this model (5) and that all gas percentages entered add up to exactly 100.0%. Do not write a custom gas percentage when the Selection Code is set to a pure gas (see codes 0 through 13 in Table 5.4 above).

Table 5.5: FT1 Modbus Holding Registers for Gas-SelectX®

Modbus Register	Data Type	Description	Units
40056	16-bit int	Gas type selection	See Table 5.4 of gas selection codes for Modbus
40057	16-bit int	Gas type selection	
40058	32-bit float LSW	Methane (C1) percentage	Percent (31.4 = 31.4%)
40059	32-bit float MSW		
40060	32-bit float LSW	Carbon Dioxide percentage	Percent (31.4 = 31.4%)
40061	32-bit float MSW		

Table 5.5: FT1 Modbus Holding Registers for Gas-SelectX® (cont'd)

Modbus Register	Data Type	Description	Units
40062	32-bit float LSW	Nitrogen percentage	Percent (31.4 = 31.4%)
40063	32-bit float MSW		
40064	32-bit float LSW	Air percentage	Percent (31.4 = 31.4%)
40065	32-bit float MSW		
40066	32-bit float LSW	Argon percentage	Percent (31.4 = 31.4%)
40067	32-bit float MSW		
40068	32-bit float LSW	Propane percentage	Percent (31.4 = 31.4%)
40069	32-bit float MSW		
40070	32-bit float LSW	Helium percentage	Percent (31.4 = 31.4%)
40071	32-bit float MSW		
40072	32-bit float LSW	Oxygen percentage	Percent (31.4 = 31.4%)
40073	32-bit float MSW		
40074	32-bit float LSW	Butane percentage	Percent (31.4 = 31.4%)
40075	32-bit float MSW		
40076	32-bit float LSW	Hydrogen percentage	Percent (31.4 = 31.4%)
40077	32-bit float MSW		
40080	32-bit float LSW	Ethane percentage	Percent (31.4 = 31.4%)
40081	32-bit float MSW		
40082 - 40197		Reserved	
40098*	32-bit float LSW	Ammonia percentage	Percent (31.4 = 31.4%)
40099*	32-bit float MSW		
40100*	32-bit float LSW	Chlorine percentage	Percent (31.4 = 31.4%)
40101*	32-bit float MSW		
40102*	32-bit float LSW	CO percentage	Percent (31.4 = 31.4%)
40103*	32-bit float MSW		
40104 to 40113		Reserved	
40114*	32-bit float LSW	N2O percentage	Percent (31.4 = 31.4%)
40115*	32-bit float MSW		
40116 to 40129		Reserved	
40130*	32-bit float LSW	Water percentage	Percent (31.4 = 31.4%)
40131*	32-bit float MSW		
40132*	32-bit float LSW	Acetone percentage	Percent (31.4 = 31.4%)
40133*	32-bit float MSW		

*These registers are only available on FT1 firmware v10.0 or later.

Scope - BACnet Communication
This portion of the manual describes the BACnet MS/TP (RS485) implementation using RS485 serial communication physical layer for the Fox Thermal FT1 mass flow meter.

BACnet Protocol
BACnet MS/TP (Building Automation and Control Network/Master Slave Token Passing) is a data link layer protocol designed for communication between devices in building automation control systems. The protocol is based on devices, objects, properties, and services. Information inside a BACnet device is organized into a series of objects. Properties allow the data from the object to be written or read. The actions that a BACnet device uses to interact with another device are the services.

The FT1 Device profile: BACnet Smart Sensor (B-SS)

FT1 supports the following device binding methods:

Receive Who-Is, send I-Am (BIBB DM-DDB-B)
Receive Who-Has, send I-Have (BIBB DM-DOB-B)

Objects for FT1:

Analog Input 1 = Flow
Analog Input 2 = Gas Temperature
Analog Input 3 = Total Flow / Reset Total
Analog Input 4 = Elapsed Time since reset

BACnet Indicators
Green LED indicator LP3 cycles on and off to indicate that the FT1 is operating. Orange LED indicator LP2 blinks when BACnet signals are received and yellow LP1 blinks when BACnet signals are transmitted.

Device object property identifiers and restrictions: (properties that are writable)

Object _Name	< 10 bytes
Object _ Identifier	Device Type only
Max _ info_ Frames	<=255
Max _ Master	<=127

BACnet Interoperability Building Blocks (BIBB'S) provide function capabilities for data exchange between devices.

FT1 BIBB's supported:

DS-RP-B Read Property
DS-WP-B Write Property
DM-DDB-B Dynamic Device Binding
DM-DOB-B Dynamic Object Binding
DM-DCC-B Device Communication Control
DS-RPM-B ReadPropertyMultiple
DM-RD-B Reinitialize Device

MS/TP baud rates:

9600, 19200, 38400, 57600, 76800, 115200

FT1 Character sets supported:

ANSI X3.4, UTF-8

Fox Thermal BACnet vendor ID: 650

For more information about BACnet visit http://www.bacnet.org/.

Communication Protocol and Parameters
To program the communication parameters, press **I/O (F1)** key from the Main Menu.

```
        MAIN MENU
I/O     FLO     DSP     EXIT
```

F1 F2 F3 F4

This is the Main Menu for the programming mode. To exit the programming mode, press **EXIT (F4)** repeatedly until "Normal Mode" is seen briefly. Choose **I/O (F1)** to access the communication output.

```
          SET I/O
COM             420     EXIT
```

F1 F2 F3 F4

Then press **COM (F1)** to select communication parameters

Set Bus protocol for BACnet:

```
Comm=BACnet
NXT                     OK
```

F1 F2 F3 F4

Press **NXT (F1)** until BACnet is selected as shown and then press **OK (F4)** to accept the setting.

```
Baud=9600
NXT                     OK
```

F1 F2 F3 F4

Press **NXT (F1)** repeatedly until the correct selection is shown and then press **OK (F4)** to accept the setting.

Selections are:

"9600"
"19200"
"38400"
"57600"
"76800"
"115200"

Next select the MS/TP Mac address. The selection is from 0-127. Please note that only one device can be on a MS/TP Mac address.

```
MAC_ADD=23
CHG                OK
```

F1 F2 F3 F4

Next select the MS/TP Max Master using **CHG (F1)**. The selection is from 0-127. Press **OK (F4)** to accept the setting.

```
MAX_MASTER=127
CHG                OK
```

F1 F2 F3 F4

Next input the device object instance using **CHG (F1)**. Selection is from 0-4194303. Press **OK (F4)** to accept the setting.

```
ID=12531
CHG                OK
```

F1 F2 F3 F4

Next enter the device object name (9 characters maximum) using **CHG (F1)**. Press **OK (F4)** to accept the setting.

```
NAME=FT1_FLOW
CHG                OK
```

F1 F2 F3 F4

NOTE! Power cycle is required for the new settings to take effect.

Scope - HART Communication
The Fox Thermal FT1 transmitter complies with HART Protocol Revision 7.1. This section of the manual specifies all the device-specific features and documents HART Protocol implementation details (e.g., the Engineering Unit Codes supported). The functionality of this Field Device is described sufficiently to allow its proper application in a process and its complete support in HART-capable Host Applications.

Purpose
This specification provides a complete description of this Field Device from a HART Communication perspective. The specification is designed to be a technical reference for HART capable Host Application Developers, System Integrators and knowledgeable End Users. It also provides functional specifications (e.g., commands and performance requirements) used during development, maintenance and testing. This document assumes the reader is familiar with HART Protocol requirements and terminology.

References
HART Smart Communications Protocol Specification. HCF_SPEC-13.

Device Identification

Manufacturer Name:	Fox Thermal Instruments	**Model Name:**	FT1
Manufacture ID Code:	24635 (603b hex)	**Device Type Code:**	63874 (F982 hex)
HART Protocol Revision:	7.1	**Device Revision:**	1
No. of Device Variables:	None		
Physical Layers Supported:	FSK		
Physical Device Category:	Transmitter, DC-isolated Bus Device		

Product Overview
The FT1 HART communication option can be monitored and configured using a HART master device or a hand-held communicator.

Process Flow Rate 4-20mA Analog Output
The 4-20mA output of the FT1 HART represents the process flow rate measurement, linearized and scaled according to the configured range of the instrument. This output corresponds to the Primary Variable. HART Communication is supported on this loop.

The 4-20mA output of the FT1 should be configured for flow rate when using HART. If the 4-20mA output is set to report temperature, HART communication will report the 4-20mA value for temperature rather than flow.

HART Indicators
Green LED indicator LP3 cycles on and off to indicate that the FT1 is operating. Orange LED indicator LP2 blinks when HART signals are received and Yellow LP1 blinks when HART signals are transmitted. The LEDs are located behind the display panel.

The orange LED indicator LP2 will be on continuously when HART communication is enabled and the 4-20mA wiring is not connected.

FT1 HART Communication Setup
HART communication must be ordered from the factory and selected in the FT1 Serial Communication menu for HART communication to operate. When this communication parameter is changed, power to the FT1 must be cycled for it to take effect.

Communication Protocol and Parameters
To program the communication parameters, press **I/O (F1)** key from the Main Menu.

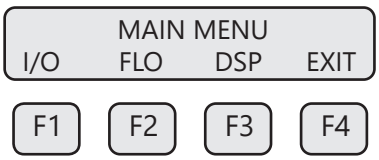

This is the Main Menu for the programming mode. To exit the programming mode, press **EXIT (F4)** repeatedly until "Normal Mode" is seen briefly. Choose **I/O (F1)** to access the communication output.

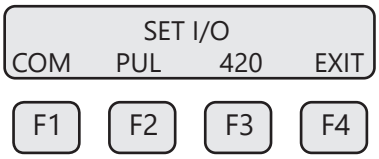

Then press **COM (F1)** to select communication parameters.

Set Bus protocol for HART:

```
Comm=HART
                    OK
```

F1 F2 F3 F4

Press **NXT (F1)** until HART is selected as shown and then press **OK (F4)** to accept the setting.

NOTE! Power cycle is required for the new settings to take effect.

Dynamic Variables
Four Dynamic Variables are implemented.

Variable	Meaning	Units
PV	Flow Rate	In Selected Units
SV	Total	In Selected Units
TV	Temperature	In Selected Units
QV	Elapsed Time	In Hours

Status Information
Device Status
Bit 4 ("More Status Available") is set when any failure is detected. Command #48 provides additional detail.

Extended Device Status
This bit is set if a sensor error is detected. "Device Variable Alert" is set if the Primary Variable (PV) is out of limit.

Additional Device Status (Command 48)
Command #48 returns 2 Device-Specific Status bytes of data, with the following status information: These bits are set when an alarm or error condition is present. The bit automatically clears when the condition returns to its normal state.

Byte	Bit	Meaning	Class
0	0	Power Up Indication	Status
	1	High Flow Limit Alarm	Alarm
	2	Low Flow Limit Alarm	Alarm
	3	High Temperature Limit Alarm	Alarm
	4	Low Temperature Limit Alarm	Alarm
	5	Sensor out of range	Error
	6	Mix error	Alarm
	7	Check Parameter Settings	Error
1	0	In Simulation Mode	Alarm
	1	Frequency output out of range	Alarm
	2	CH 1 4-20mA out of range	Alarm
	3	Not used	
	4	Not used	
	5	Not used	
	6	CRC database error	Error
	7	Error with Total	Error

Common-Practice Commands, Supported Commands
The following common-practice commands are implemented:

34 Write Primary Variable (PV) Damping Value
35 Write PV Range Value
36 Set PV Upper Range Value
37 Set PV Lower Range Value
38 Reset "Configuration Changed" Flag
40 Enter/Exit Fixed Current Mode
44 Write PV Units
45 Trim Loop Minimum
46 Trim Loop Maximum
48 Read Additional Device Status (Command #48 returns 2 bytes of data)
59 Write Number of Response Preambles

Common-Practice Commands, Unsupported Commands

Burst Mode - This device does not support Burst Mode.
Catch Device Variable - This device does not support Catch Device Variable.
Device-Specific Commands - No Device-Specific commands are implemented.

Modes

Fixed current mode is implemented, using Command 40. This mode is cleared by power loss or reset.

Damping

Damping is standard, affecting only the PV and the loop current signal.

Capability Checklist

Manufacturer, model	Fox Thermal Instruments, FT1
Device Type	Transmitter
HART revision	7.1
Device Description available	No
Number and type of sensors	1
Number and type of actuators	0
Number and type of host side signals	1 : 4-20mA analog
Number of Device Variables	0
Number of Dynamic Variables	4
Mappable Dynamic Variables	No
Number of common-practice commands	17
Number of device-specific commands	0
Bits of additional device status	8
Alternative operating modes	No
Burst mode	No
Write-protection	Yes

PRECAUTIONS

GB **WARNING!** BEFORE ATTEMPTING ANY MAINTENANCE, TAKE THE NECESSARY SAFETY PRECAUTIONS BEFORE REMOVING THE PROBE FROM THE DUCT (EXAMPLE: PURGE LINES OF TOXIC AND/OR EXPLOSIVE GAS, DEPRESSURIZE, ETC...).

WARNING! EXPLOSION HAZARD. DO NOT REMOVE OR REPLACE COMPONENTS OR FUSES UNLESS POWER HAS BEEN SWITCHED OFF WHEN A FLAMMABLE OR COMBUSTIBLE ATMOSPHERE IS PRESENT.

WARNING! EXPLOSION HAZARD. DO NOT DISCONNECT EQUIPMENT WHEN A FLAMMABLE OR COMBUSTIBLE ATMOSPHERE IS PRESENT.

WARNING! TURN OFF INPUT POWER BEFORE REMOVING OR INSTALLING A CIRCUIT BOARD ASSEMBLY FROM THE ENCLOSURE.

Access to Electronics

Accessing electronics is not normally required for maintenance purposes. If a loose connection is suspected, unscrew the rear cap of the meter to access the wiring terminations.

CAUTION! BE SURE POWER TO METER IS SWITCHED OFF BEFORE ATTEMPTING TO ACCESS ELECTRONICS. If there is a problem and a loose connection is not found, please contact Fox Thermal Customer Service for technical assistance at (831) 384-4300.

PRECAUCIONES

ES **¡ADVERTENCIA!** ANTES DE INTENTAR CUALQUIER MANTENIMIENTO, TOME LAS PRECAUCIONES DE SEGURIDAD NECESARIAS ANTES QUE RETIRAR LA SONDA DEL DUCTO (EJEMPLO: PURGUE LAS LÍNEAS DE GASES TÓXICOS Y/O EXPLOSIVOS, DESPRESURICE, ETC...).

¡ADVERTENCIA! PELIGRO DE EXPLOSIÓN. NO RETIRE O REEMPLACE COMPONENTES O FUSIBLES A MENOS QUE LA ENERGÍA HAYA SIDO DESCONECTADA SIEMPRE QUE ESTÉ PRESENTE UNA ATMÓSFERA INFLAMMABLE O COMBUSTIBLE.

¡ADVERTENCIA! PELIGRO DE EXPLOSIÓN. NO DESCONECTE NINGÚN EQUIPO CUANDO UNA ATMÓSFERA INFLAMABLE O COMBUSTIBLE ESTÉ PRESENTE PRONTO.

¡ADVERTENCIA! DESCONECTE LA ENERGÍA DE ALIMENTACIÓN ANTES DE REMOVER O INSTALAR UN ENSAMBLE DE TARJETA DE CIRCUITO DEL GABINETE.

Acceso a la Electrónica

Normalmente no se requiere tener acceso a la electrónica para propósitos de mantenimiento. Si se sospecha de una conexión suelta, desatornille la tapa posterior de la caja del medidor para tener acceso a las terminales

PRECAUCIÓN: ASEGÚRESE QUE LA ALIMENTACIÓN DEL MEDIDOR ESTE DESCONECTADA ANTES DE INTENTAR EL ACCESO A LA ELECTRÓNICA. Si existe algún problema y no se encuentra ninguna conexión suelta, por favor póngase en contacto con el Servicio al Cliente de Fox para asistencia técnica al número (831) 384-4300.

PRÉCAUTIONS

FR **AVERTISSEMENT !** AVANT TOUTE TENTATIVE DE MAINTENANCE, OBSERVER LES CONSIGNES DE SECURITE NECESSAIRES AVANT DE RETIRER LA SONDE DE LA CONDUITE (PAR EXEMPLE, PURGER LES LIGNES DES GAZ EXPLOSIFS/TOXIQUES QU'ELLES POURRAIENT CONTENIR, DEPRESSURISER LE CONTENEUR, ETC.).

AVERTISSEMENT ! RISQUE D'EXPLOSION. NE PAS RETIRER NI REMPLACER DES COMPOSANTS OU DES FUSIBLES SI LA SOURCE D'ALIMENTATION N'A PAS ETE DEBRANCHEE DANS UNE ATMOSPHERE INFLAMMABLE OU COMBUSTIBLE.

AVERTISSEMENT ! RISQUE D'EXPLOSION. NE PAS DEBRANCHER UN EQUIPEMENT DANS UNE AMBIANCE COMBUSTIBLE OU INFLAMMABLE.

AVERTISSEMENT ! COUPER L'ALIMENTATION AVANT DE RETIRER OU D'INSTALLER UN ENSEMBLE DE CARTE DE CIRCUITS IMPRIMES DU BOITIER.

Accès aux composants électroniques

L'accès aux composants électroniques n'est généralement pas nécessaire dans le cadre de la maintenance. Si une connexion lâche est suspectée, dévisser le capuchon d'extrémité arrière du boîtier du compteur pour accéder aux terminaisons

ATTENTION : S'ASSURER QUE L'ALIMENTATION DU COMPTEUR EST COUPEE AVANT D'ACCER AUX COMPOSANTS ELECTRONIQUES. En cas de problème et qu'aucune connexion lâche n'est détectée, veuillez contacter le service client de Fox pour obtenir une assistance technique au (831) 384-4300.

VORSICHTSMASSNAHMEN

DE **ACHTUNG!** BITTE ERGREIFEN SIE DIE ERFORDERLICHEN SICHERHEITSMAßNAHMEN, BEVOR SIE IRGENDWELCHE WARTUNGSARBEITEN DURCHFÜHREN UND DIE MESSSONDE AUS DEM ROHR ENTFERNEN (BEISPIEL: LEITUNGEN ZUR ENTFERNUNG VON GIFTIGEN UND/ODER EXPLOSIVEN GASEN REINIGEN, DRUCK SENKEN, USW.).

ACHTUNG! EXPLOSIONSGEFAHR. KOMPONENTEN ODER SICHERUNGEN BITTE ERST DANN ENTFERNEN ODER AUSTAUSCHEN, WENN DER STROM GETRENNT WURDE, FALLS EINE ENTZÜNDLICHE ODER BRENNBARE ATMOSPHÄRE VORHANDEN IST.

ACHTUNG! EXPLOSIONSGEFAHR. GERÄT NICHT VOM STROM TRENNEN, WENN EINE ENTZÜNDLICHE ODER BRENNBARE ATMOSPHÄRE VORHANDEN IST.

ACHTUNG! EINGANGSLEISTUNG AUSSCHALTEN, BEVOR LEITERPLATTENBAUGRUPPEN AUS DEM GEHÄUSE AUSGEBAUT ODER IN DIESES EINGEBAUT WERDEN.

Zugriff auf die Elektronik

Der Zugriff auf die Elektronik ist zu Wartungszwecken normalerweise nicht erforderlich. Falls eine lose Verbindung vermutet wird, schrauben Sie die hintere Endkappe des Messgerätgehäuses ab, um auf die Anschlüsse zugreifen zu können.

VORSICHT: STELLEN SIE SICHER, DASS DER STROM AN DAS MESSGERÄT AUSGESCHALTET IST, BEVOR SIE VERSUCHEN, AUF DIE ELEKTRONIK ZUZUGREIFEN. Falls Probleme auftreten und keine lose Verbindung gefunden werden kann, wenden Sie sich bitte zwecks technischer Unterstützung an den Fox-Kundendienst unter der Nummer (831) 384-4300.

Broken or Damaged Probe
If the sensor is broken or damaged, the probe and electronics must be returned to the factory. A new sensor will be installed and calibrated. Refer to "Returning Your Meter" on p. 109.

Flow Calibration and Calibration Validation
To ensure high accuracy of your model FT1 Flow Meter, Fox Thermal provides a full NIST traceable calibration. It is recommended that the meter's accuracy be checked annually by performing the CAL-V™ Calibration Validation test.

Fuse Replacement

WARNING! Turn input power OFF before removing or installing a fuse. Use only recommended fuse replacements.

Verify the fuse is defective by measuring it with an Ohm Meter (Two replacement fuses are provided with each unit). Replacement fuse is Littelfuse part number 0454.750MR

To replace the fuse:
The fuse F1 is located near the power terminal block and can be removed by using tweezers or needle-nose pliers.

Sensor Cleaning
The sensor is insensitive to small amounts of residue, but continued use in dirty environments will require periodic cleaning. To inspect the sensor, remove power from electronics and remove the unit from the pipe or duct, exposing the sensor elements. If they are visibly dirty, clean them with water or alcohol (ethanol) using an appropriate brush until they appear clean again. Even though the sensor elements are rugged, avoid touching them with any solid object and use a light touch while cleaning them.

Instructions for Removing and Inserting the Meter from a Pressurized Pipe using the Retractor

WARNING! Possible injury or damage to equipment may occur if the retractor is not used correctly. Please read the following instructions carefully prior to using the retractor.

CAUTION! Never remove the restraint cable without first closing the Ball Valve and bleeding off pressure.

WARNING! When working with the retractor, do not stand or position any part of your body in the path of the flow meter. An injury may occur if the probe is forced outward by system pressure.

How to Remove the Meter from the Retractor (System Pressurized)

Step 1 - Remove the Probe from the Flow Stream

1. Disconnect power from the meter.

NOTE! At 150 psig maximum system pressure, the standard 3/4" probe will have approximately 66 lbs. of force and the optional 1/2" probe will have approximately 30 lbs. of force pushing it out of the retractor.

2. System pressure may force the probe out of the retractor when the compression nut is loosened. Hold the flow meter to counteract the force of the system pressure, and carefully loosen and unscrew the compression nut.
3. While supporting the meter, slowly slide the probe out of the retractor until the restraint cable is tight.
4. Close the ball valve all the way.

CAUTION! <u>At this point there is still pressure inside the retractor.</u>

Figure 6.1

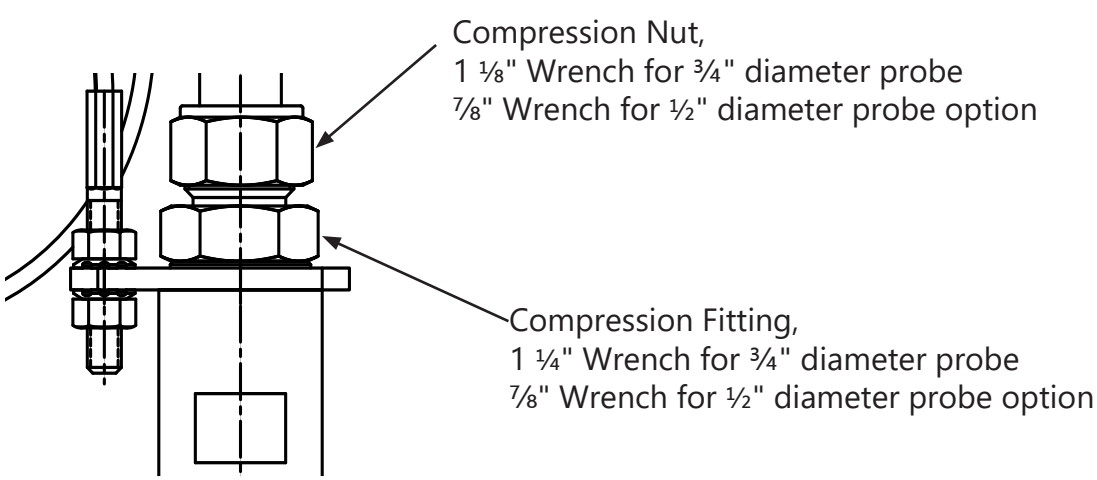

Step 2 - Remove the Probe from the Retractor Body

5. After removing the probe from the flow stream (#1-4 on previous page), slowly loosen the compression fitting (see figure 6.2), until the pressure in the retractor is relieved.
6. Retighten the compression fitting.
7. Remove the Collar Clamp by using a 3/16" Hex Key.
8. Carefully slide the probe out of the retractor while supporting the meter.

Figure 6.2

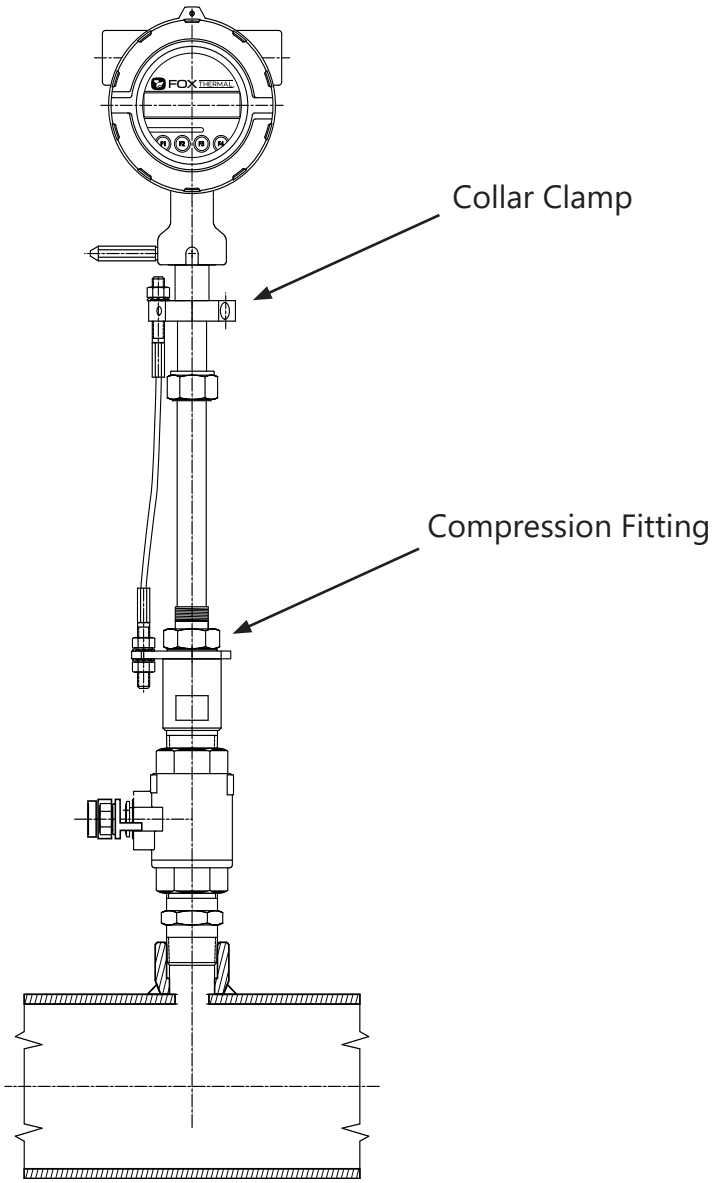

How to Insert the Probe into the Flow Stream (Valve closed, System Pressurized)

1. Carefully, slide the probe into the retractor.
2. Install the collar clamp just below the collar spacer, pushing the spacer against the probe fitting, and tighten it in place on the probe. Slide the probe back out of the retractor until the cable is straight and taut.

Figure 6.3

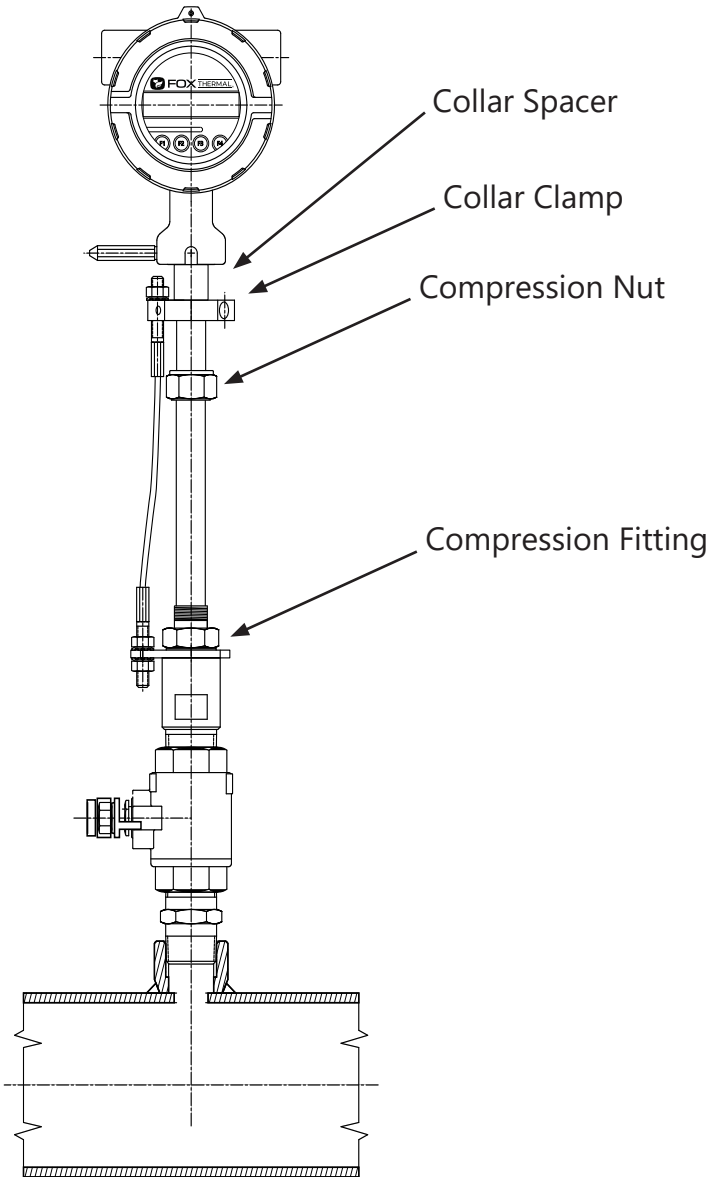

3. Slowly open the ball valve to the full open position. Push the meter and probe into the pipe, then hand tighten the compression nut onto the compression fitting.

NOTE! At a maximum system pressure of 150 psig, the force required to push the probe in place to tighten the compression Nut will be approximately 66 lbs.

4. Verify that the probe is aligned with the center line of the pipe, and pointed in the direction of flow.

Figure 6.4

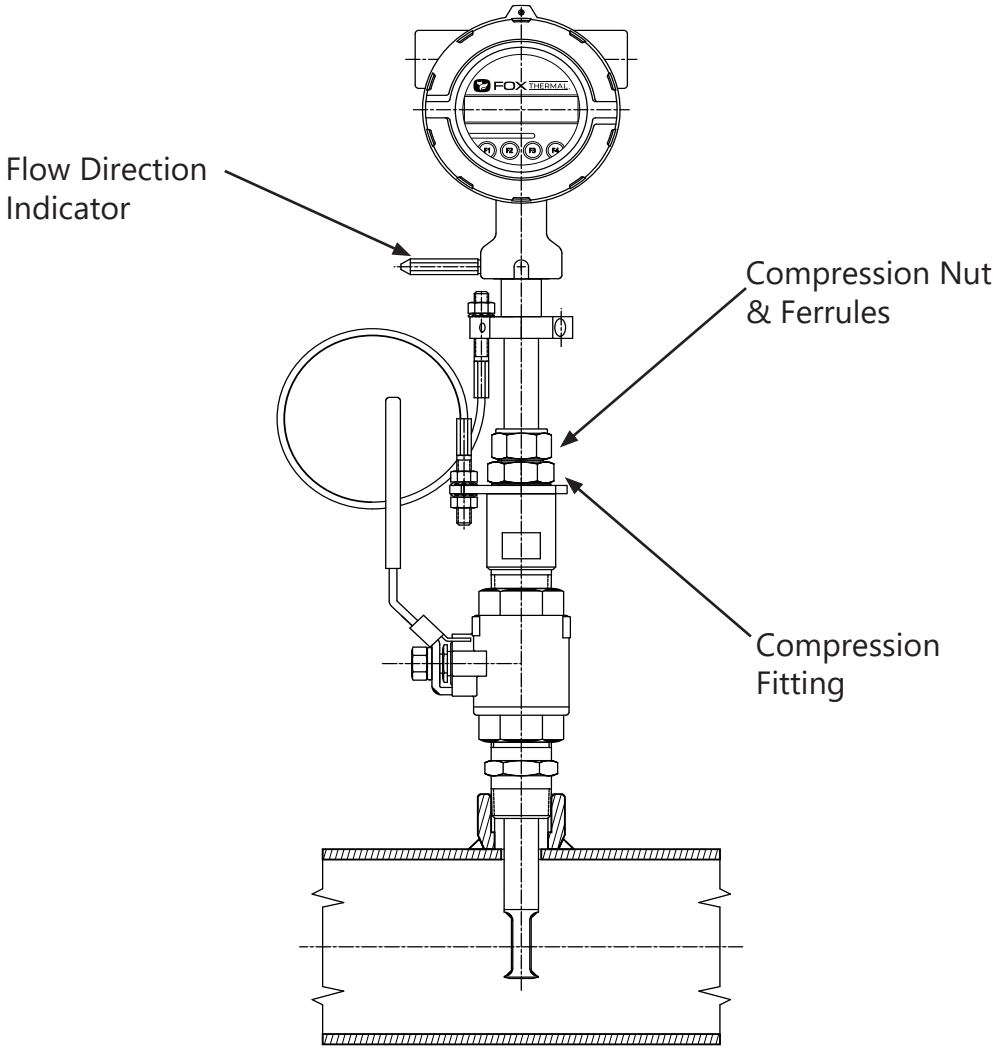

5. Secure the probe in place by tightening the compression nut with a wrench and a wrench on the compression fitting. See Page 26 of the manual for detailed instructions to tighten the compression nut.
6. Power may now be applied to the meter.

Troubleshooting

CAUTION! The electronics and sensor supplied by Fox Thermal are calibrated as a single precision mass flow meter. Interchanging sensors will decrease the accuracy of the flow meter. If you experience a problem with your FT1 flow meter, call Fox Thermal Customer Service Department, Technical Assistance at (831) 384-4300.

Problem	Possible Cause(s)	Action(s)
Meter does not initialize	1. Malfunction in flow meter 2. Electromagnetic Interference (EMI)	1. Return flow meter to Fox Thermal for repair (Refer to p. 109 for shipping instructions) 2. Check meter power cycles. 3. Press and release F1 and F2 at the same time; the display will enter Engineering screens. 4. Press F1 to get to screen #23; record power cycle value. 5. Press F4 to return to normal operation; monitor meter until problem returns. 6. Return to screen #23 to see if power cycles have increased; microprocessor is resetting due to EMI electrical noise entering the meter. 7. Check Power input and output cables grounding and routing.
Flow measurement is erratic or fluctuating	1. Very turbulent flow 2. Sensor dirty 3. Sensor broken 4. Probe not mounted securely 5. Malfunction in flow meter 6. Meter installed incorrectly	1. Increase dampening (see filter settings in "Flow Parameters" on p. 55) 2. Clean sensor (Refer to Maintenance section, p. 90) 3. Return flow meter to Fox Thermal for repair (Refer to p. 109 for shipping instructions) 4. Remount probe (see Installation section, p. 20); must be mounted securely without vibration. If vibration persists, choose a new mounting location without vibration. 5. Return flow meter to Fox Thermal for repair (Refer to p. 109 for shipping instructions) 6. Re-install meter according to instructions (Refer to installation section, p. 20)

Problem	Possible Cause(s)	Action(s)
Display Error	1. Loose or damaged ribbon cable 2. Damaged electronics 3. Ambient temperature	1. Visual inspection. 2. Return the meter or display for repair. 3. Operate meter between -20 to 70°C
Flow measure-ment seems low	1. Probe not oriented properly 2. Sensor dirty	1. Orient probe per installation sections: Insertion (p. 24) 2. Clean sensor (p. 90)
Unit will not power-up	1. No power input 2. Bad fuse 3. Bad Power supply	1. Check fuse (F1) located next to TS1 on main board. 2. Check for correct power supply voltage at TS1 on main board. If fuse is OK and unit still won't power up, call Fox Thermal for additional assistance

Troubleshooting CAL-V™

If the FT1 Meter fails a CAL-V™ Calibration Validation test, there are a few reasons. Follow these recommendations:

1. Flow rate in the pipe:
   - Run the test again under a higher flow rate if possible.
2. The sensor may be dirty or damaged:
   - Visually inspect the meter for damage. If damage is found, meter may need to be serviced. Contact Fox Thermal Technical Assistance at 831-384-4300 for more information.
   - Try cleaning the sensor and try the test again under flow conditions.
3. If the meter fails again, contact Fox Thermal Technical Assistance at 831-384-4300 for more information.

Installation Problems

The following is a summary listing of problems that may be encountered with the installation of the FT1 thermal mass flow meter.

1. *Improper wiring connections.*

   Refer to Figures 3.1 to 3.10 and "Wiring Precautions" in Wiring section (p. 32) for further guidance.

2. *Inadequate power source.*

   The FT1 requires 12 to 24VDC at 6 Watts minimum to operate. A 20 Watt power supply is

recommended for powering the FT1 to ensure it operates properly under all temperature ventilation, and power on conditions. If the voltage supplied at the input terminals of the FT1 is not within the range of 10VDC to 30VDC, a variety of problems can occur including a dim display, inaccurate flow readings or faulty 4-20mA, pulse and communication interface.

3. *Flow measurement seems inaccurate.*
   - Check to ensure that the flow meter is installed so that the Flow Direction Indicator is pointing in the direction of flow. Refer to Figure 2.6 (p. 24). If not, change orientation of meter.
   - Check that the insertion depth of the sensor/probe is correct. The end of the probe should be adjusted as per Figure 2.5 (p. 23).
   - Ensure that there are a minimum of fifteen diameters of straight pipe upstream of the sensor and ten diameters downstream. If complex flow disturbances are upstream of the sensor, extension of the straight pipe may be required to ensure accurate flow measurement. Contact Fox Thermal for assistance.
   - Ensure that pipe inside diameter in the meter matches data on the Fox Thermal Calibration Certificate. The pipe inside diameter is programmed into the flow meter through the front panel (see Flow Parameters, p. 55).

4. *Erratic flow reading (especially a flow reading spiking high).*

   This may be a symptom of moisture in the flow stream. Fox Thermal flow meters are designed to work in relatively dry gas applications only. Contact Fox Thermal to discuss resolutions to this problem.

5. *Flow meter is not responding to flow.*
   - Check to ensure adequate power is supplied to the flow meter. If things appear to be correct, perform this functional test before calling Fox Thermal. Carefully remove the probe and sensor from the pipe. For those flow meters with a display - and if the display is reading zero - blow on the sensor to see if a response occurs. If nothing happens, take a damp rag or sponge and place it in contact with the sensor. A reading should occur. Contact Fox Thermal Customer Service with this information.

6. *Display and/or 4-20mA signal reading above zero flow when no flow is occurring in the pipe.*

   If the reading is less than 5% of full scale, it is likely this is a normal condition caused by convection flow created by the heated sensor. It does not mean that the zero of the instrument is improperly set. The Fox Thermal sensor is extremely sensitive to gas flow and can even read the small flow caused by convection. If this is an unacceptable condition, please contact Fox Thermal Customer Service for alternatives.

Alarm Codes

Alarm Code	Reason	Action
13	Flow rate above high limits	Refer to the FLOW MENU 2 section on p. 55 of this Manual to verify limit is within range. Check ALM = HiFloAlm under PRM.
14	Flow rate below low limits	Refer to the FLOW MENU 2 section on p. 55 of this Manual to verify limit is within range. Check ALM = LoFloAlm under PRM.
15	Temperature above high limits	Refer to the FLOW MENU 2 section on p. 55 of this Manual to verify limit is within range. Check ALM=HiTempAlm under PRM.
16	Temperature below low limits	Refer to the FLOW MENU 2 section on p. 55 of this Manual to verify limit is within range. Check ALM = LoTempAlm
22	Sensor out of range	Check the CSV voltage in ENG menu of the Engineering Screens, refer to page 15. It should be approximately 0.04 volts when FT1 is measuring no flow and up to 0.25 volts at high flow. Verify FT1 parameters are set correctly. If FT1 View is available, check parameter settings in Configuration page. If using FT1 front panel, check parameters in UNIT menu of FLOW MENU 1 and PRM menu of FLOW MENU 2, refer to pages 10-11.
23	Gas mix error	Gas mix must equal 100%.
24	Check settings	One or more internal settings are corrupted or out of spec. Contact Fox Thermal Service for instructions to verify settings.
25	Simulation mode	Meter is in Simulation Mode. Refer to the FLOW MENU 1 section on p. 57 of this Manual. Use the SIM Section under Diagnostics to return to normal operation.
26	Pulse/alarm output over range	Refer to the DIGITAL OUTPUT MENU on p. 9 of this Manual. Verify the Pulse/alarm Output settings are within limits.
32	4-20mA is out of range	Refer to the MAIN MENU on p. 8 of this Manual. Use the Set I/O section to verify range limits.
34	Busy	Meter is recalculating new parameters.
36	Database CRC Error	Refer to the Reset CRC section on p. 60 of this manual. Verify the programmed values are verified and corrected before clearing the error. Contact Fox Thermal Service Department for possible causes.
38	CSV Volt Error	The CSV Voltage is out of the acceptable range. This may be a result of failed electronics, parameters, or sensor connections. Refer to action of Alarm Code 22.
39	VFLO Volt Error	The VFLO Voltage is out of the acceptable range. This may be a result of failed electronics, parameters, or sensor connections. Refer to action of Alarm Code 22.

Alarm Codes (cont'd)

Alarm Code	Reason	Action
40	TSV Volt Error	The TSV Voltage is out of the acceptable range. This may be a result of failed electronics, parameters, or sensor connections. Refer to action of Alarm Code 22.
41	VTEMP Volt Error	The VTEMP Voltage is out of the acceptable range. This may be a result of failed electronics, parameters, or sensor connections. Refer to action of Alarm Code 22.
42	Delta T Error	The Delta T error between the sensor elements is too large. This may be a result of failed electronics, parameters, or sensor connections. Refer to action of Alarm Code 22.
43	Invalid Board Calibration Values	The board calibration values do not match the values saved in the backup. This is the result of data corruption. The best course of action is to perform a 'Restore Database' within the meter menus - this will restore the meter to its factory settings and calibrations.
46	TEMP Input Error	This may be a result of failed electronics, parameters, or sensor connections. Refer to action of Alarm Code 22. Focus on the Yellow and Blue wires.
47	TSV Input Error	This may be a result of failed electronics, parameters, or sensor connections. Refer to action of Alarm Code 22. Focus on the Yellow and Blue wires.
48	CSV Input Error	This may be a result of failed electronics, parameters, or sensor connections. Refer to action of Alarm Code 22. Focus on the Red and White wires.
49	FLO Input Error	This may be a result of failed electronics, parameters, or sensor connections. Refer to action of Alarm Code 22. Focus on the Red and White wires.
53	ADC Temp Below Spec	This is the result of low temperatures inside the meter enclosure. Be sure to keep the meter within the specification.
54	ADC Temp Above Spec	This is the result of high temperatures inside the meter enclosure. Be sure to keep the meter within the specification.
55	ADC NOREF	This is a result of failed electronics. Contact support for further assistance.

Performance Specs

Flow Accuracy:
- Air or N2: ±1% of reading ±0.2% of full scale
- Other gases: ±1.5% of reading ±0.5% of full scale
- Accuracy specification applies to customer's selected flow range
- Maximum range: 15 to 25,000 SFPM (0.07 to 118 NMPS)
- Minimum range: 15 to 500 SFPM (0.07 to 2.4 NMPS)
- Straight, unobstructed pipe requirement
  - Insertion Meters: 15 diameters upstream; 10 downstream
  - Inline Meters: 8 diameters upstream; 4 downstream

Flow Repeatability: ±0.2% of full scale

Flow Response Time: 0.8 seconds (one time constant)

Temperature Accuracy: ±1° F (±0.6° C)

Calibration:
- Factory Calibration to NIST traceable standards
- CAL-V™: In-situ, operator-initiated calibration validation

Operating Specs

Gas-SelectX® Gas Selections:
Pure gas menu and Gas Mix Menu. See the Fox Thermal website for more information on availability of current gases.

Units of Measurement (field selectable):
SCFM, SCFH, NM3/M, NM3/H, NM3/D, NLPS, NLPM, NLPH, MCFD, MSCFD, SCFD, MMSCFD, MMSCFM, SM3/D, SM3/H, SM3/M, LBS/S, LBS/M, LBS/H, LBS/D, KG/S, KG/M, KG/H, SLPM, MT/H,

Gas Pressure (maximum at 100º F):
- Insertion meter: 740 psig (51.02 barg)
- 316 SS inline meter with NPT ends: 500 psig (34.5 barg)
- 316 SS inline meter with 150 lb. flanges: 230 psig (15.86 barg)
- Carbon steel inline meter with NPT ends: 500 psig (34.5 barg)
- Carbon steel inline meter with 150 lb. flanges: 285 psig (19.65 barg)

Retractor Assembly: 150 psig (10.34 barg)

Check with factory for higher pressure options.

NOTE! When Teflon ferrule option ordered, gas pressure is 60psig (4.1 barg) maximum

NOTE! The EU Pressure Equipment Directive (PED) requires that the minimum ambient and fluid temperature rating for carbon steel flow bodies not be below -29°C.

Operating Specs (cont'd)

Temperature:
DDC-Sensor™: -40 to 250°F (-40 to 121°C)
Enclosure: -40 to 158°F (-40 to 70°C)*
***NOTE!** Display dims below -4˚F (-20˚C), function returns once temperature rises again.

Relative Humidity: 90% RH maximum; non-condensing
NOTE! Condensing liquids contacting the sensor can cause erratic flow indication.

Flow Velocity Range:
15 to 25,000 SFPM (0.07 to 118 NMPS)
Turndown: up to 1000:1; 100:1 typical

Maximum Flow Ranges for Insertion Flow Meters			
Pipe Diameter	**SCFM**	**MSCFD**	**NM^3/hr**
1.5" (40mm)	0-354	0-510	0-558
2" (50mm)	0-583	0-840	0-920
2.5" (63mm)	0-830	0-1,310	0-1,200
3" (80mm)	0-1,280	0-1,840	0-2,020
4" (100mm)	0-2,210	0-3,180	0-3,480
6" (150mm)	0-5,010	0-7,210	0-7,910
8" (200mm)	0-8,680	0-12,500	0-13,700
10" (250mm)	0-13,600	0-19,600	0-21,450
12" (300mm)	0-19,400	0-27,900	0-30,600

NOTE! To determine if the FT1 will operate accurately in other pipe sizes, divide the maximum flow rate by the pipe area. The application is acceptable if the resulting velocity is within the velocity range above. Check Fox Thermal website for velocity calculator.

Maximum Flow Ranges for Inline Flow Meters			
Size	**SCFM**	**MSCFD**	**NM^3/hr**
0.75"	0-93	0-134	0-146
1"	0-150	0-216	0-237
1.25"	0-260	0-374	0-410
1.5"	0-354	0-510	0-558
2"	0-583	0-840	0-920
2.5"	0-830	0-1,310	0-1,200
3"	0-1,280	0-1,840	0-2,020
4"	0-2,210	0-3,180	0-3,480
6"	0-2,500	0-3,600	0-3,950

NOTE! Standard conditions of air at 70°F and one atmosphere. Consult factory for other gases and for flow ranges above those listed. Inline meters above 2,500 SCFM (3,950 NM3/H) air may require third party calibration. Contact Fox Thermal.

Operating Specs (cont'd)
Input Power: 12 to 24VDC, 6 watts
Full Input Power Range: 10 to 30VDC.
A 20-Watt or greater power supply is recommended to power the FT1.
Class I Equipment (Electrical Grounding Required for Safety).
Installation (Over-voltage) Category II for transient over-voltages.

Outputs:
Channel 1:
- Standard isolated 4-20mA output configured to indicate flow; fault indication per NAMUR NE43.
- The 4-20mA load resistance must be 125 ohms or less when operating on 12 volt power and 600 ohms or less on 24 volt power.
- HART communication option

Channel 2:
FT1 can be ordered with either the pulse output or serial communication option.
- Pulse option: Isolated open collector output rated for 5 to 24VDC, 20mA maximum load, 0 to 100Hz (the pulse output can be configured to either transmit a 0 to 100Hz signal proportional to flow rate or an on/off alarm).
- Serial communication option: Isolated Modbus RTU (RS485) or BACnet MS/TP (RS485).

USB Communication:
- Isolated USB 2.0 for interfacing with a laptop or computer is standard.
- FT1 View™: A free PC-based software tool that provides complete configuration, remote process monitoring, and data logging functions through USB communication.

4-20mA and Loop Verification:
Simulation mode used to align 4-20mA output with the input to customer's PLC/DCS.

Physical Specs
Probe diameter: ¾" (standard) or ½" (option)

Probe material: 316 stainless steel

Enclosure:
NEMA 4X (IP67), aluminum, dual ¾" FNPT conduit entries.

Flow Meter Installation:
A standard compression fitting with 1" MNPT threads is provided with the ¾" standard FT1 probe to connect the probe to a customer supplied 1" branch outlet welded to the pipe. For ½" probe options, a ¾" compression fitting MNPT threads is supplied requiring a customer-supplied ¾" branch outlet welded to the pipe.

Agency Approvals

CE: Approved
EMC Directive; 2014/30/EU
Electrical Equipment for Measurement, Control and Lab Use: EN61326-1:2013
Pressure Equipment Directive: 2014/68/EU
Weld Testing: EN ISO 15614-1 and EN ISO 9606-1, ASME B31.3

FM (FM16US0005X) and FMc (FM16CA0005X)
Class I, Division 1, Groups B,C,D;
Class II, Division 1, Groups E,F,G;
Class III, Division 1; T4, Ta = - 40˚C to +70˚C;
Class 1, Zone 1, AEx/Ex db IIB + H2 T4 Gb; Ta= -40˚C to +70˚C; Type 4X, IP66/67

ATEX (FM16ATEX0013X)
II 2 G Ex db IIB + H2 T4; Gb Ta = - 40˚C to +70˚C; IP66/67
II 2 D Ex tb IIIC T135˚C; Db Ta = - 40˚C to +70˚C; IP66/67

IECEx (IECEx FMG 16.0010X)
Ex db IIB + H2 T4; Gb Ta = - 40˚C to +70˚C; IP66/67
Ex tb IIIC T135˚C; Db Ta = - 40˚C to +70˚C; IP66/67

ATEX and IECEx Standards:

EN 60079-0	IEC 60079-0
EN 60079-1	IEC 60079-1
EN 60079-31	IEC 60079-31
EN 60529 +A1 +A2	IEC 60529

Specific Conditions of Use:

1. The flameproof joints of the equipment are not intended to be repaired. Consult the manufacturer if dimensional information on the flameproof joints is necessary.
2. Refer to the manufacturer's instructions to reduce the potential of an electrostatic charging hazard on the equipment or enclosure.

Fig. 7.1: Insertion Meter with Retractor Dimensions
Dimensions shown in inches (millimeters).

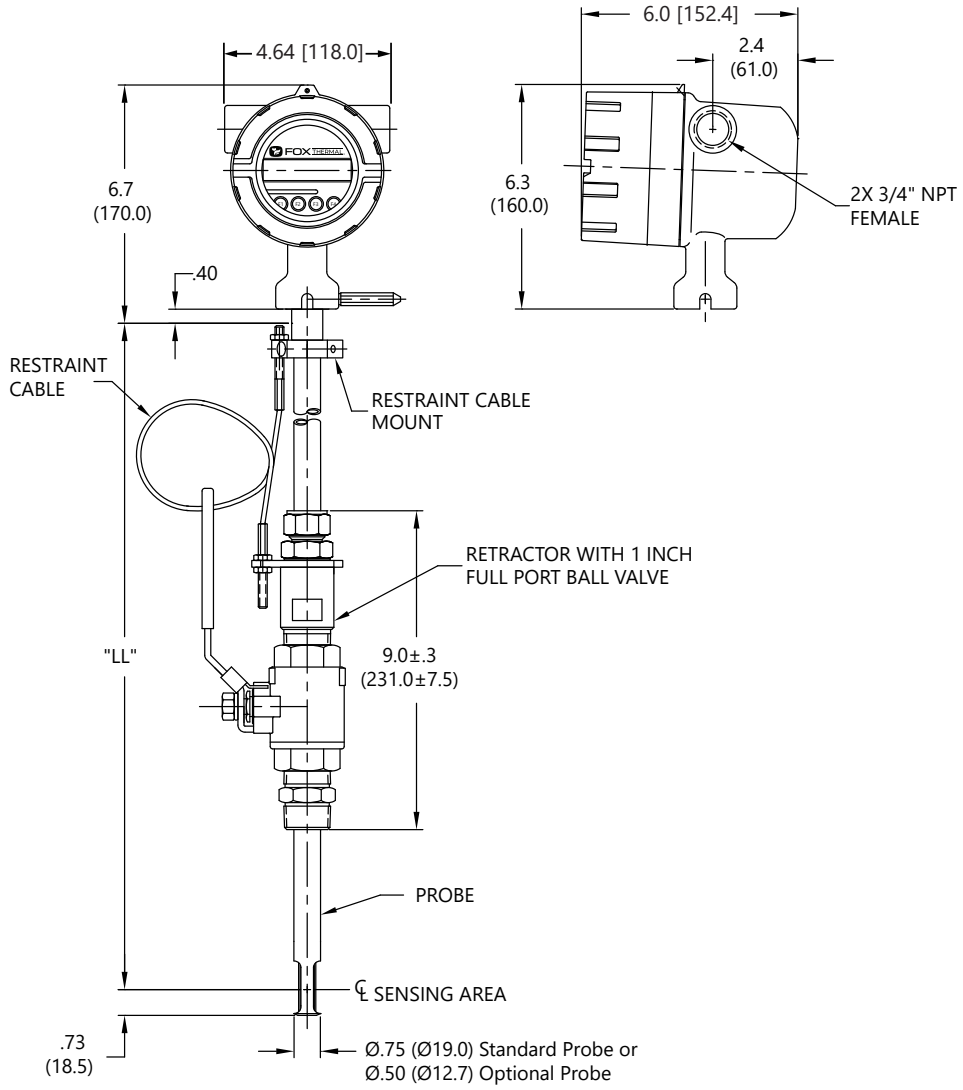

Table 7.1: Insertion Meter with 316 stainless steel probe

Probe Option	Probe Length	Dimension "LL" ± .10
[model code]	[inches]	[inches / millimeters]
15R	15"	15.0" (381mm)
18R	18"	18.0" (457mm)
24R	24"	24.0" (610mm)
30R	30"	30.0" (762mm)
36R	36"	36.0" (914mm)

Fig. 7.2: Insertion Meter Dimensions

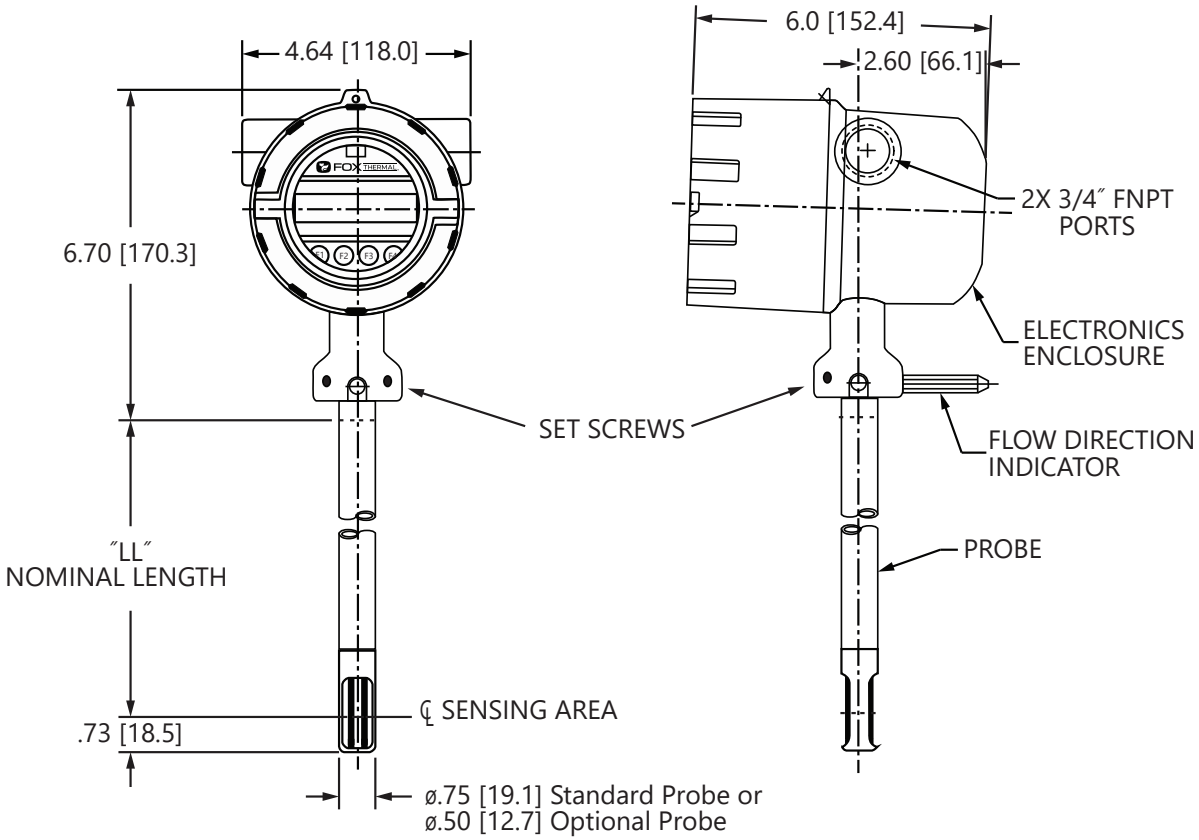

Table 7.2: Insertion Meter with 316 stainless steel probe

Probe Option	**Probe** Length	**Dimension "LL" ± .10**
[model code]	[inches]	[inches / millimeters]
06I	6"	6.0" (152mm)
09I	9"	9.0" (229mm)
12I	12"	12.0" (305mm)
15I	15"	15.0" (381mm)
18I	18"	18.0" (457mm)
24I	24"	24.0" (610mm)
30I	30"	30.0" (762mm)
36I	36"	36.0 " (914mm)

Fig. 7.3: Inline Meter with Flow Body NPT End Connections Dimensions

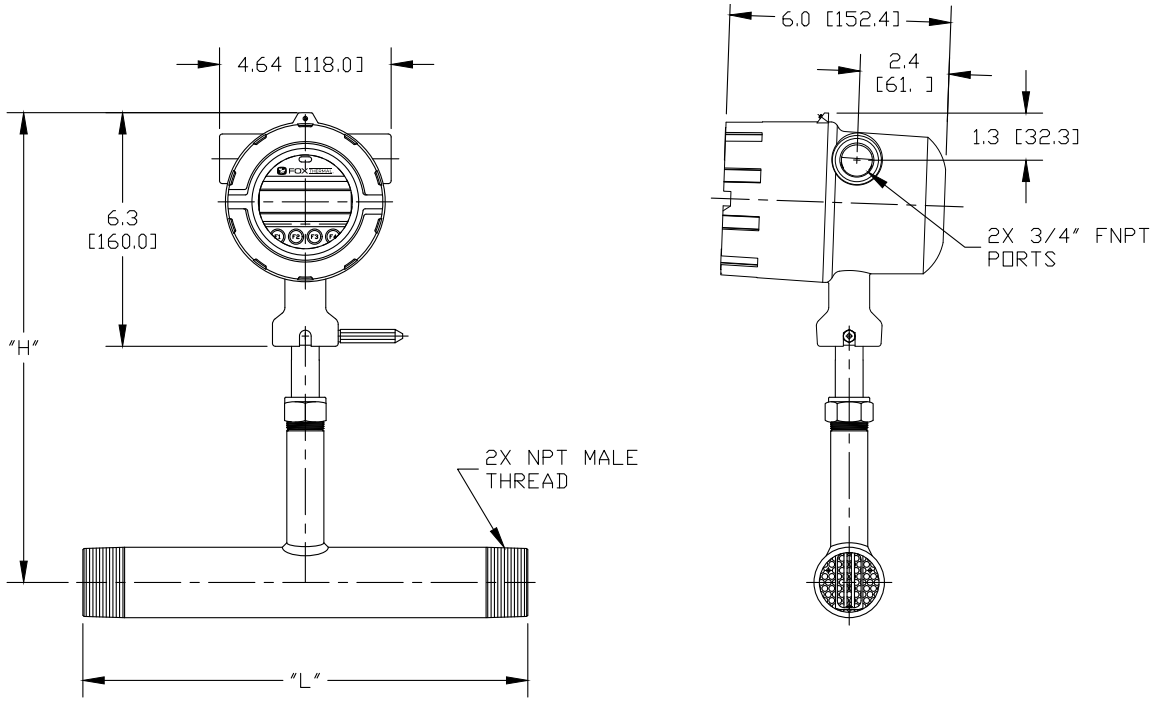

Table 7.3: Inline Meter with Flow Body and NPT End Connections

Flow Body Option	Pipe Size	Dimension "L" ± .10	Dimension "H" ± .25
[model code]	[inches]	[inches]	[inches / millimeters]
075P *	**0.75"**	**12"**	**10.7" (271.8mm)**
10P *	**1.00"**	**12"**	**10.7" (271.8mm)**
125P *	**1.25"**	**12"**	**10.7" (271.8mm)**
15P *	**1.50"**	**12"**	**12.7" (322.6mm)**
20P **	**2.00"**	**12"**	**12.7" (322.6mm)**
25P **	**2.25"**	**18"**	**12.7" (322.6mm)**
30P **	**3.00"**	**18"**	**12.7" (322.6mm)**

**Available in 316 stainless steel only.*
***Available in 316 stainless steel or A106 Grade B Carbon steel pipe.*

Fig. 7.4: Inline Meter with Flow Body 150 lb. RF Flange End Connections Dimensions

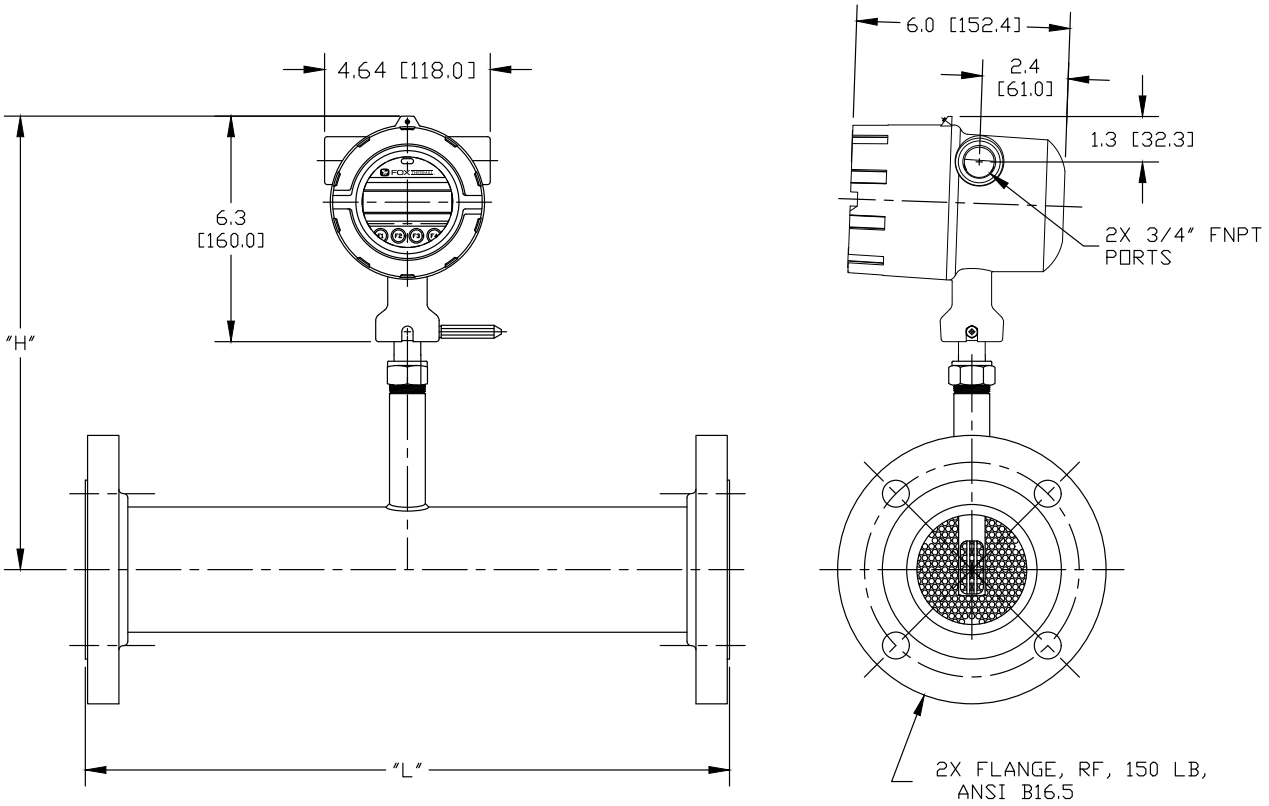

Table 7.4: Inline Meter with Flow Body and 150 lb. RF Flange End Connections Dimensions

Flow Body Option	Pipe Size	Dimension "L" ± .10	Dimension "H" ± .25
[model code]	[inches]	[inches]	[inches / millimeters]
075F *	0.75"	12"	**10.7" (271.8mm)**
10F *	1.00"	12"	**10.7" (271.8mm)**
125F *	1.25"	12"	**10.7" (271.8mm)**
15F *	1.50"	12"	**12.7" (322.6mm)**
20F **	2.00"	12"	**12.7" (322.6mm)**
25F **	2.50"	18"	**12.7" (322.6mm)**
30F **	3.00"	18"	**12.7" (322.6mm)**
40F **	4.00"	18"	**12.7" (322.6mm)**
60F **	6.00"	24"	**12.7" (322.6mm)**

**Available in 316 stainless steel only.*
***Available in 316 stainless steel or A106 Grade B Carbon steel pipe.*

Warranty Statement and Terms and Conditions

Limited Warranty - All Products

Fox Thermal warrants that for a period of one year following the date of original shipment of Fox's products that the product will conform to Fox's standard written specifications applicable to such product and will be free from defects in workmanship. For more details, view the Limited Warranty section in the Terms & Conditions of Sale. Find that document at this link:

https://www.foxthermal.com/pdf/terms-and-conditions.pdf

Consumable and Fragile Material Warranty

Fox warrants that consumable materials, supplied by Fox either as part of an instrument or system, or separately, will be free from defects in material and workmanship at the time of shipment. A list of key consumables and expected lifetimes may be found in the applicable Seller equipment operation and maintenance manual.

Terms and Conditions of Sale

For more details about Fox's warranty statement and exclusions, please download the Terms & Conditions of Sale document. Find that document at this link:

https://www.foxthermal.com/pdf/terms-and-conditions.pdf

Returning Your Meter
If you need to return your meter to the factory for evaluation, recalibration, or repair services, please register in our Service Portal online. You can find the Service Portal by going to our website at: www.foxthermal.com

Look for the "Account" login in the top right of the homepage.

Once registered, you can log into the Service Portal and generate an RMA for return of your meter to the Fox Thermal factory.

Rush recalibration service is available for a fee. Restrictions apply.

Tracking Your RMA (Meter Service Status)
If you have already generated an RMA and shipped your meter to Fox Thermal for service, you can log into the Service Portal to check the status of your return.

What to expect while your meter is being serviced
Depending on the type of service required when returning your Fox Thermal meter, there are varying turnover times for servicing a meter. The average time needed to service the meter is 7-10 days (not including shipping or peak production times).

Glossary of Terms and Definitions

AWG	American Wire Gauge
Bara	Bar absolute
CTC	Contact
CAL	Calibration
CHG	Change
COM	Communication
CSV	Current Sense Voltage
DC	Direct Current
DCS	Distributed Control System
DN	Down
DSP	Display
ELP	Elapsed time
Feq	Frequency
Ft^2	Square Feet
I/O	Input/Output
INP	Input
LB	Pound
LB/D	Pound per Day
LB/H	Pound per Hour
LB/M	Pound per Minute
LB/S	Pound per Second
LCD	Liquid Crystal Display
KG	Kilogram
KG/H	Kilogram per Hour
KG/M	Kilogram per Minute
KG/S	Kilogram per Second
M^2	Square Meter
mmHG	Pressure in millimeters of mercury
MMSCFD	Million Standard Cubic Feet per Day
MS/TP	Master-Slave, Token Passing
NAESB	North American Energy Standards Board
NEMA	National Electrical Manufactures Association
NIST	National Institute of Standards and Technology
NL	Normal Liter
NLPH	Normal Liter per Hour
NLPM	Normal Liter per Minute
NM3	Normal cubic Meter
NM3/H	Normal cubic Meter per Hour
NM3/M	Normal cubic Meter per Minute
NPT	National Pipe Thread
PC	Personal Computer
P/U	Pulse per Unit
PIP A^2	Pipe Area
PLC	Programmable Logic Controller
PRM	Parameters
PRS	Pressure
PSIA	Pounds per Square Inch Absolute
Pt	Point
PSW	Password
SIM	Simulation
SCF	Standard Cubic Feet
SCFM	Standard Cubic Feet per Minute
SCFH	Standard Cubic Feet per Hour
SCFD	Standard Cubic Feet per Day
SPC	Special Control
STP	Standard Temperature and Pressure
TMP	Temperature
TSI	Internal Variable
TSV	Internal Variable
UNT	Unit
U/P	Unit per Pulse
420	4-20mA output

Index

Access to Electronics, p. 32
Alarm Codes, p. 98
Alarm wiring, p. 37
Analog 4-20mA output, p. 46
Breakage or Damage of Probe, p. 90
CAL-V™, p. 62
Dimension Details, p. 104
Display Screens, p. 44
Display Setup, p. 51
Entering the programming mode, p. 45
Filter value, p. 56
Flow Meter Placement, p. 20
Flow Units, p. 53
Pulse/alarm Output, p. 48
Fuse Replacement, p. 90
Glossary, p. 110
Installation,
  Compression Fitting - Insertion, p. 26
  Lateral Placement, p. 20
  Mounting, p. 20
  Orientation of Meter - Insertion, p. 24
Introduction, p. 16
Level 2 password, p. 52
Local Display, p. 18
Local Input Wiring, p. 34
Mass Flow, p. 16
Measurement Mode, p. 44
Menu Tree,
  Digital Output, p. 9
  Display Menu, p. 12
  Engineering Display, p. 13
  Gas-SelectX®, p. 14
  Main Menu, p. 8
  Flow Menu 1, p. 10
  Flow Menu 2, p. 11
  CAL-V™ Menu, p. 13
Mounting meter, p. 20
Orientation of meter - Insertion type, p. 24
Password
  Level 1, p. 52
  Level 2, p. 52
  Programming, p. 52
Power Input Wiring, p. 34
Preventative Maintenance, p. 90
Product Description, p. 16
Programming
  Analog 4-20mA Output, p. 46
  Alarm Output, p. 49
  Changing values or strings, p. 45
  Display Setup, p. 51
  Flow Parameters, p. 55
  Flow and maximum pulse/alarm, p. 49
  Pulse/alarm Output, p. 48
  Password, p. 52
  Programming Mode, p. 45
  Pulse-per-unit, p. 48
  Reset CRC, p. 60
  Selecting from a list, p. 45
  Serial Communication, p. 50
  Simulation, p. 57
  Unit-per-pulse, p. 49
  Unit settings, p. 53
  Using the Local Display, p. 43
Replacements Fuses, p. 90
Return Procedure, p. 109
Sensor Cleaning, p. 90
Sensor Orientation, p. 24
Simulation Mode, p. 57
Theory of Operation, p. 16
To program the display, p. 51
Troubleshooting, p. 95
  Alarm Codes, p. 98
  General, p. 95
  Installation Problems, p. 96
USB Interface, p. 43
Warranty, p. 108
Wiring
  Alarms, p. 37
  Pulse/Alarm Outputs, p. 37
  Grounding, p. 33
  Input - Local, p. 34
  Instructions, p. 32
  Local meters, p. 34
  Power Input, p. 34
  Precautions, p. 33

Wiring

Troubleshooting Tips

NOTE! is used for Notes and Information

WARNING! is used to indicate a hazardous situation which, if not avoided, could result in death or serious injury.

CAUTION! is used to indicate a hazardous situation which, if not avoided, could result in minor or moderate injury.

Indicates compliance with the WEEE Directive. Please dispose of the product in accordance with local regulations and conventions.

FOX® THERMAL

Make Downtime a Thing of the Past

THERMAL MASS FLOW METERS
NON-STOP PERFORMANCE

SALES@FOXTHERMAL.COM

Phone
831.384.4300

Address
399 Reservation Road
Marina, CA 93933 USA

Worldwide
foxthermal.com