MODEL

FC20

Flow Conditioner for Gas Applications

HIGHLIGHTS

- Reduces the need for long straight pipe runs
- Creates proper gas flow profile from irregular flow profiles
- Use with insertion style flow meters
- Install upstream from the flow meter probe between 150 lb. flanges and customer-supplied gaskets
- Easy to center in the pipe by aligning the outer edge of the flow conditioner with the outer edge of flange.
- Precision, laser-cut design
- 316 stainless steel material
- Available in 13 sizes for schedule 40 pipes: 1.5", 2", 2.5", 3", 4", 6", 8", 10", 12", 14", 16", 18" and 20"

FOX® THERMAL

OIL & GAS | INDUSTRIAL | BIOGAS | WASTEWATER

THE IMPORTANCE OF STRAIGHT PIPE RUNS

Insufficient straight run of upstream and downstream piping can lead to improper flow of the air or gas in the pipe at the sensing point. As you increase the distance between the sensing elements and the cause of the disturbance, the flow becomes more uniform. Fox Thermal has recommended straight run requirements for insertion and inline products based on established and tested criteria to maintain our accuracy specifications.

Figure 1A: Fully Developed Laminar Flow

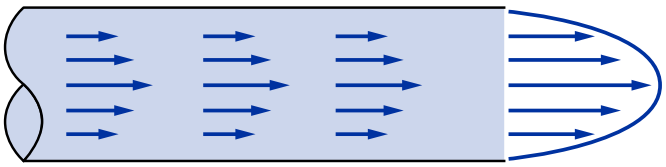

INSTALLATION SOLUTIONS FOR LIMITED PIPE RUNS

Flow meter accuracy is often dependent on achieving a uniform flow profile near the center of the pipe. Distortion and swirl are disturbances that can be remedied either by extending the length of space between the cause of the disturbance and the sensing element (increasing straight pipe runs) or by adding a flow conditioner to correct the disturbance.

FLOW CONDITIONING

In some applications, space isn't available for enough upstream or downstream straight pipe. In these cases, the FC20 flow conditioner can be a solution.

Insertion thermal mass flow meters are easy to install and require upstream and downstream straight runs. In the past, the only option to reducing straight pipe runs for very tight spaces was to order flow meters with a flow body and built-in flow conditioner. To give customers more flexibility, Fox Thermal has developed the FC20 flow conditioner for use with insertion style flow meters.

Each flow meter is calibrated with the flow conditioner 2D upstream as shown in Figure 2 to ensure the highest accuracy.

IRREGULAR FLOW

Irregular flow is problematic for accurate flow measurement.

Figure 1B: Fully Developed Turbulent Flow

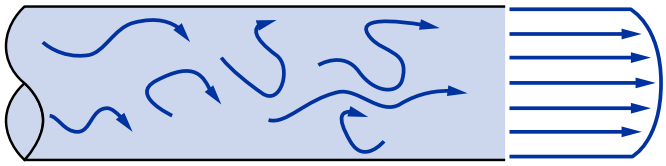

Figure 1C: Irregular/Distorted Flow Profile

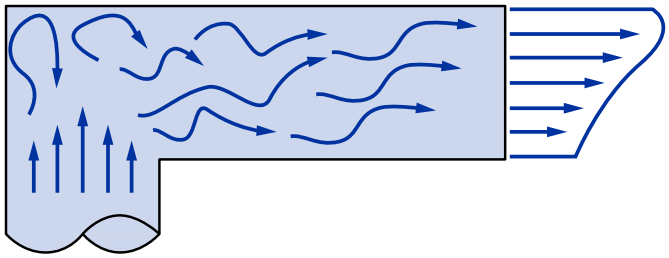

Bi-directional or swirling flow leads to miscalculation of the mass flow rate, so it is important to have the sensing elements placed in the centerline of the pipe, in line with the flow, and with a uniform flow profile.

TYPES OF OBSTRUCTIONS

There are several factors leading to irregular or distorted flow:

- Single or multiple bends in pipe
- Tees or pipe branches
- Devices or valves placed in line with the flow
- Pipe size transitions

Each of these obstruction types can lead to irregular or distorted flow in the pipe.

INSTALLATION

LATERAL PLACEMENT

To determine where to install the FC20 flow conditioner, the pipe size is important. FC20s require 5 diameters (5D) of upstream straight pipe. Also, the flow meter's sensor should be 5D before any downstream disturbances. The distance between the FC20 flow conditioner and the flow meter's sensor is 2D. The relationship between pipe size and pipe diameters is illustrated in Figure 2 with lengths listed in Table 1 below. If more total straight pipe run than the minimum is available, most of it should be used upstream. The pressure drop can be minimized when the flow profile requires less correction.

Figure 2: Straight Pipe Run Requirements

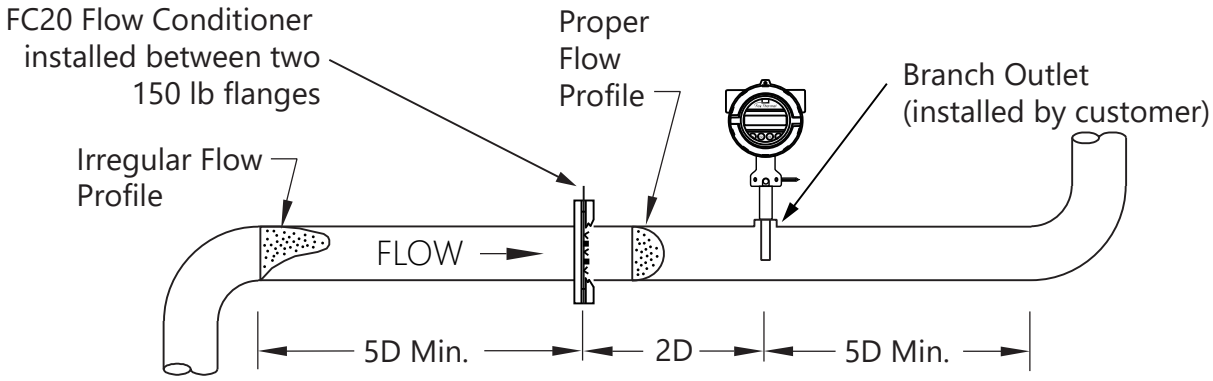

Table 1: Straight Pipe Run Requirements

Sch. 40 Pipe Size (inches)	Diameter Length	
	2D Inch (mm)	5D Minimum Inch (mm)
1.5	3.22 (82)	8 (203)
2	4.14 (105)	10 (254)
2.5	4.94 (125)	12 (305)
3	6.14 (156)	15 (381)
4	8.06 (205)	20 (508)
6	12.13 (308)	30 (762)
8	15.96 (405)	40 (1016)
10	20.04 (509)	50 (1270)
12	23.88 (607)	60 (1524)
14	26.24 (666)	66 (1676)
16	30.00 (762)	75 (1905)
18	33.75 (857)	84 (2133)
20	37.62 (956)	94 (2389)

SPECIFICATIONS

SIZING

FC20s are available in 13 sizes for schedule 40 pipes:

1.5", 2", 2.5", 3", 4", 6", 8", 10", 12", 14", 16", 18", and 20".

For smaller pipe sizes, an inline flow meter is required.

TECH TIP

TECHNOLOGY COMPARISON

STRAIGHT RUN REQUIREMENTS (PIPE DIAMETERS)

Compare Upstream & Downstream Straight Run Requirements for Common Flow Meter Technologies

DP METERS

20 Upstream

10 Downstream

VORTEX METERS

35 Upstream

5 Downstream

TURBINE METERS

20 Upstream

5 Downstream

ULTRASONIC METERS

10 to 20 Upstream

10 to 20 Downstream

PERFORMANCE

Table 2: Air Pressure Drop Data - Sizes 1.5" to 6" (1.61 to 6.065 Pipe ID)

Flow Rate		FC20 Sizes in inches and Pipe Inner Diameters (Schedule 40 Pipes) in Inches											
		1.5" (1.61 ID)		2" (2.067 ID)		2.5" (2.469 ID)		3" (3.068 ID)		4" (4.026 ID)		6" (6.065 ID)	
m^3/Hr	Ft^3/Min	mBar	inH2O	mBar	inH2O	mBar	inH2O	mBar	inH2O	mBar	inH2O	mBar	inH2O
5	3	0.65	0.26										
10	6	0.68	0.27	0.65	0.26								
15	9	0.74	0.30	0.67	0.27	0.65	0.26						
20	12	0.83	0.33	0.71	0.28	0.67	0.27	0.65	0.26				
30	18	1.07	0.43	0.79	0.32	0.71	0.29	0.67	0.27	0.65	0.26		
40	24	1.40	0.56	0.92	0.37	0.77	0.31	0.69	0.28	0.65	0.26		
50	29	1.84	0.74	1.08	0.43	0.85	0.34	0.73	0.29	0.67	0.27		
60	35	2.37	0.95	1.27	0.51	0.95	0.38	0.77	0.31	0.68	0.27		
70	41	2.99	1.20	1.50	0.60	1.06	0.43	0.81	0.33	0.69	0.28	0.65	0.26
80	47	3.71	1.49	1.77	0.71	1.19	0.48	0.87	0.35	0.71	0.29	0.65	0.26
90	53	4.53	1.82	2.07	0.83	1.34	0.54	0.93	0.37	0.73	0.29	0.65	0.26
100	59	5.45	2.19	2.41	0.97	1.50	0.60	1.00	0.40	0.76	0.30	0.66	0.26
150	88	11.46	4.60	4.62	1.85	2.59	1.04	1.46	0.58	0.91	0.37	0.69	0.28
200	118	19.88	7.98	7.72	3.10	4.11	1.65	2.09	0.84	1.13	0.45	0.73	0.29
300	177	43.94	17.64	16.57	6.65	8.46	3.40	3.92	1.57	1.74	0.70	0.85	0.34
400	235	77.62	31.16	28.97	11.63	14.55	5.84	6.47	2.60	2.60	1.05	1.02	0.41
500	294			44.91	18.03	22.38	8.99	9.76	3.92	3.71	1.49	1.23	0.49
600	353			64.39	25.85	31.95	12.83	13.77	5.53	5.06	2.03	1.49	0.60
700	412			87.41	35.09	43.26	17.37	18.51	7.43	6.66	2.68	1.80	0.72
800	471					56.31	22.61	23.99	9.63	8.51	3.42	2.16	0.87
900	530					71.10	28.54	30.19	12.12	10.60	4.26	2.57	1.03
1000	589					87.63	35.18	37.12	14.90	12.94	5.19	3.02	1.21
1500	883							82.73	33.21	28.32	11.37	6.01	2.41
2000	1177									49.85	20.01	10.19	4.09
3000	1766											22.14	8.89
4000	2354											38.86	15.60
5000	2943											60.36	24.23

PERFORMANCE

EQUATION

dP = 0.01786 * KE + 0.6343

Error for 95% Confidence Interval: +/-25%

The pressure drop can be minimized when the flow profile requires less correction.

TERM DEFINITIONS

dP = Pressure Differential [mBar]

D = Actual Density [kg/m^3]

V = Actual Average Velocity [m/s]

KE = Kinetic Energy = 0.5*D*V^2

INSTALLATION

FC20 ORIENTATION

Every FC20 has "UPSTREAM" etched into a tab extending out from the flow conditioner. This marker should be positioned parallel to the probe with the "UPSTREAM" etching facing toward the upstream portion of the pipe.

The FC20 is installed between two 150lb flanges. Gaskets (supplied by customer) should be placed on both sides of the flow conditioner to ensure a seal. See Figure 3 on the next page for proper installation orientation.

Please refer to document #109193 for additional installation instructions.

PERFORMANCE

Table 3: Air Pressure Drop Data - Sizes 8" to 20" (7.981" to 18.812" Pipe ID)

Flow Rate		FC20 Sizes in inches and Pipe Inner Diameters (Schedule 40 Pipes) in Inches													
		8" (7.981 ID)		10" (10.02 ID)		12" (11.94 ID)		14" (13.12 ID)		16" (15.00 ID)		18" (16.87 ID)		20" (18.812 ID)	
m^3/Hr	Ft^3/Min	mBar	inH2O	mBar	inH2O	mBar	inH2O	mBar	inH2O	mBar	inH2O	mBar	inH2O	mBar	inH2O
150	88	0.65	0.26												
200	118	0.67	0.27	0.65	0.26										
300	177	0.71	0.28	0.66	0.27	0.65	0.26								
400	235	0.76	0.31	0.69	0.28	0.66	0.26	0.65	0.26						
500	294	0.83	0.33	0.71	0.29	0.67	0.27	0.66	0.27	0.65	0.26				
600	353	0.92	0.37	0.75	0.30	0.69	0.28	0.67	0.27	0.66	0.26	0.65	0.26		
700	412	1.02	0.41	0.79	0.32	0.71	0.29	0.69	0.28	0.67	0.27	0.65	0.26	0.65	0.26
800	471	1.14	0.46	0.84	0.34	0.74	0.30	0.70	0.28	0.68	0.27	0.66	0.26	0.65	0.26
900	530	1.28	0.51	0.89	0.36	0.76	0.31	0.72	0.29	0.69	0.28	0.67	0.27	0.66	0.26
1000	589	1.43	0.57	0.95	0.38	0.79	0.32	0.74	0.30	0.70	0.28	0.67	0.27	0.66	0.27
1500	833	2.43	0.97	1.36	0.54	0.99	0.40	0.88	0.35	0.78	0.31	0.72	0.29	0.69	0.28
2000	1177	3.82	1.53	1.92	0.77	1.27	0.51	1.07	0.43	0.89	0.36	0.79	0.32	0.74	0.30
3000	1766	7.81	3.13	3.52	1.41	2.07	0.83	1.61	0.65	1.21	0.49	0.99	0.40	0.87	0.35
4000	2354	13.38	5.37	5.77	2.31	3.18	1.28	2.38	0.95	1.66	0.66	1.27	0.51	1.05	0.42
5000	2943	20.55	8.25	8.65	3.47	4.61	1.85	3.36	1.35	2.23	0.90	1.63	0.65	1.28	0.51
6000	3531	29.32	11.77	12.18	4.89	6.36	2.55	4.55	1.83	2.93	1.18	2.07	0.83	1.56	0.63
7000	4120	39.68	15.93	16.35	6.56	8.43	3.39	5.97	2.40	3.76	1.51	2.59	1.04	1.90	0.76
8000	4709	51.63	20.73	21.16	8.49	10.82	4.34	7.60	3.05	4.72	1.90	3.19	1.28	2.29	0.92
9000	5297	65.17	26.16	26.61	10.68	13.53	5.43	9.46	3.80	5.81	2.33	3.86	1.55	2.73	1.09
10000	5886	80.31	32.24	32.70	13.13	16.55	6.64	11.52	4.63	7.02	2.82	4.62	1.85	3.22	1.29
15000	8829			72.79	29.22	36.45	14.63	25.14	10.09	15.00	6.02	9.60	3.85	6.44	2.59
20000	11772					64.30	25.81	44.20	17.74	26.18	10.51	16.58	6.65	10.96	4.40
30000	17657							98.65	39.60	58.10	23.33	36.50	14.66	23.87	9.58
40000	23543									102.80	41.27	64.40	25.86	41.93	16.84
50000	29429											100.27	40.26	65.17	26.16
60000	35315													93.56	37.56

INSTALLATION

Figure 3: Orientation of FC20 Flow Conditioner

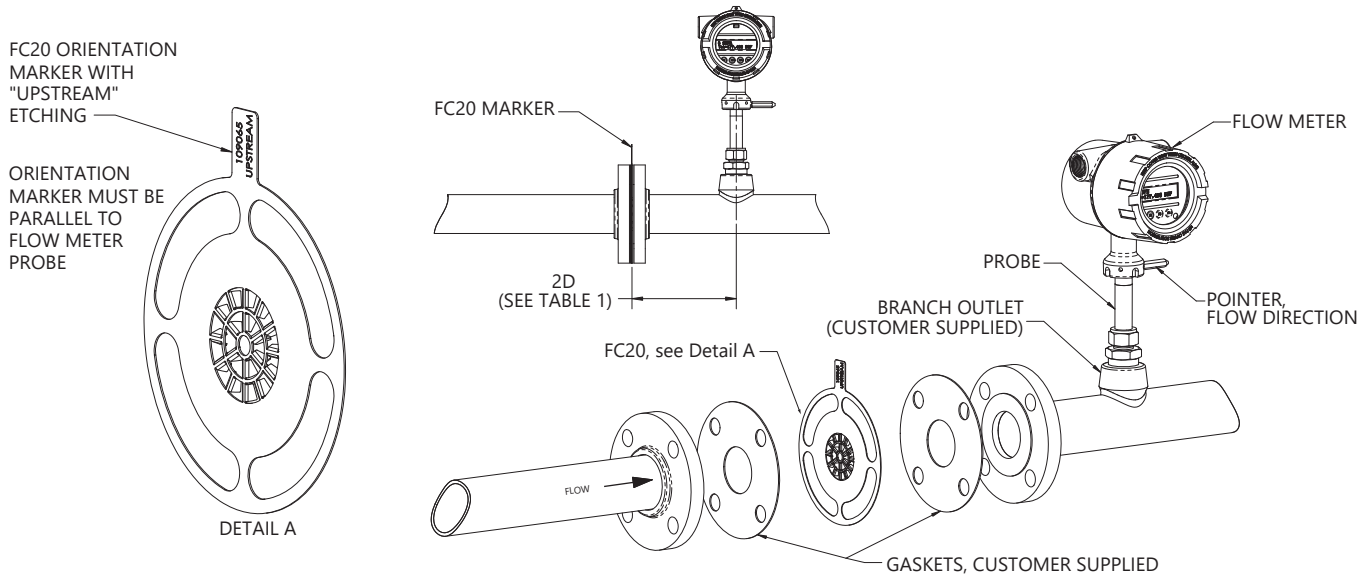

DIMENSIONS

Figure 4: FC20 Flow Conditioner Dimensions

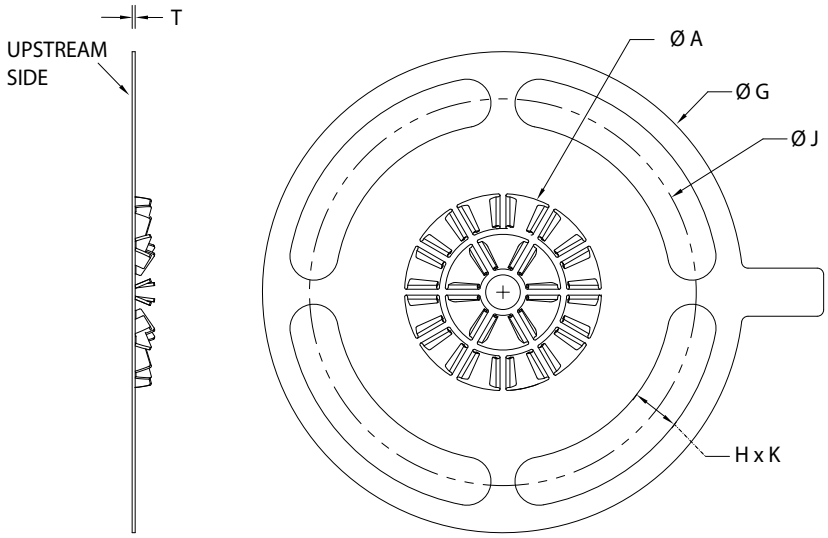

Table 4: FC20 Part Numbers and Dimensions by Size

LEGEND	N/A	A	T	G	H	J	K
P/N	Nominal Pipe Size (in)	Sch. 40 Pipe ID (mm)	Sheet Metal Thickness (mm)	Flange OD (mm)	No. of slots in Bolt Circle	Bolt Circle Dia. (mm)	Bolt Circle Slot Width (mm)
109194	1.5	40.89	0.6	127	4	98.4	15.9
109195	2	52.50	0.8	152	4	120.7	19.1
109196	2.5	62.71	1.0	178	4	139.7	19.1
109197	3	77.93	1.2	191	4	152.4	19.1
109198	4	102.26	1.5	229	8	190.5	19.1
109199	6	154.05	2.3	279	8	241.3	22.2
109200	8	202.72	3.0	343	8	298.5	22.2
109201	10	254.51	4.0	406	12	362.0	25.4
109202	12	303.23	4.5	483	12	476.3	28.6
109203	14	333.40	5.0	533	12	476.3	28.6
109204	16	381.00	6.0	597	16	539.8	28.6
109205	18	428.65	6.0	635	16	577.9	31.8
109206	20	477.82	7.0	699	20	635.0	31.8

Figure 5: Bolt Hole Layouts by Size

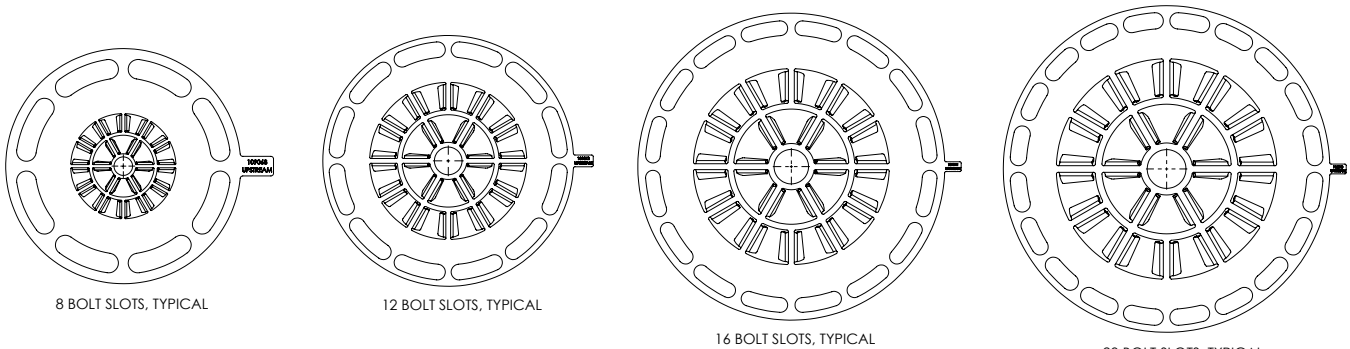

8 BOLT SLOTS, TYPICAL

12 BOLT SLOTS, TYPICAL

16 BOLT SLOTS, TYPICAL

20 BOLT SLOTS, TYPICAL

MODEL FT1

- Advanced DDC Sensor™
- Gas-SelectX® technology: Pure gas menu and a 5-gas mix
- CAL-V™ Calibration Validation
- Optional Modbus RTU (RS485), BACnet MS/TP, or HART communication protocols
- Insertion and inline styles

MODEL FT2A

- Optional Modbus RTU (RS485), BACnet MS/TP (RS485), Profibus-DP, DeviceNet, or Ethernet Modbus TCP communication protocols
- DC or AC input power options
- Insertion, inline, integral, and remote styles
- Contact input to reset total

MODEL FT3

- Infrared (IR) buttons on display/configuration panel
- Zero CAL-CHECK® & CAL-V™ Calibration Validation tests
- Optional Modbus RTU (RS485) or HART communication protocols
- DC or AC input power options
- Insertion, inline, integral, and remote styles

MODEL FT4A

- Advanced DDC Sensor™
- Gas-SelectX® technology with 3 Menus: Pure Gas, Gas Mix, and Oil & Gas Mix
- CAL-V™ Calibration Validation
- Optional Modbus RTU (RS485) or HART communication protocols
- Insertion and inline styles

MODEL FT4X - **BLM 3175 and API 14.10 Accuracy Compliant!**

- Data Logger with date/time stamp
- Advanced DDC-Sensor™
- Gas-SelectX® technology with 3 Menus: Pure Gas, Gas Mix, and Oil & Gas Mix
- CAL-V™ Calibration Validation
- Optional Modbus RTU (RS485) or HART communication protocols
- DC or AC input power options
- Insertion, inline, integral, and remote styles

Make downtime a thing of the past.

399 Reservation Road | Marina, CA 93933
Email: sales@foxthermal.com | Tel: 831.384.4300
foxthermal.com